Edition
No.61

SUNTOUR

SUNTOUR
BICYCLE EQUIPMENT
CATALOG

REAR DERAILLEUR

Slant Parallelogram Mechanism
Non-Bending Mechanism
Light Alloy Bolts
Micro Light Design
Angle Adjustment
Stainless Steel Pivot Pins
Sealed Bushing And Spiral Spring
Derailleur Pulley
Self-locking Adjusting Screws
Twin Pivot Derailleur Cage
Direct Cable Pull
Quick Cage
Sealed Mechanism
Easy Cable Threading
Adjustable Spring Tension

FRONT DERAILLEUR

Double Arm Stainless Pivot
Endless Band Mounting
Compact Derailleur Cage
Heat Trated Cage
Two-Way Cable Setting
Slant Parallelogram Front Geometry
Drawbridge System

SHIFT LEVER

Ergonomic Lever Design
Double Friction Locking Mechanism
Micro Light
Integral Cable Guide
One-Key Maintenance
Internal Travel Stops
Synchro-Shift Mechanism
One-Hand Lever Action
Endless Band Mounting
Power Racthet Mechanism

CALIPER BRAKE

Vernier Quick Release
Brake Shoe

PEDAL

Interchangeable Pedal Cages
Ground Clearance
Sealed Bearing
Oval Pedal Cage Design

FREEWHEEL & ULTRA-6 CHAIN

Versatile Freewheel Design
Slant Cut Teeth
"Zigzag" Tooth Profile
Freewheel End-Plate
Ultra-6 Chain

ULTRA6

OTHERS

Precision Bearing Surface
Dual Quick Release
Double-Sealed Mechanism
Precision Chain-Line Adjustment
Head Lock-up

OTHERS

SYSTEM MECHANISM

Mighty-Click System Mechanism
Trimec System Mechanism

SYSTEM

REAR DERAILLEUR

Slant Parallelogram Mechanism

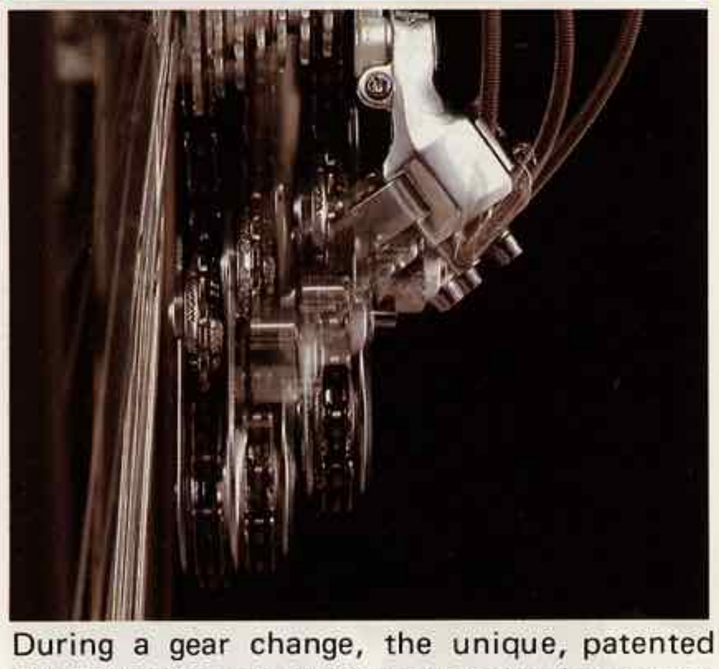

During a gear change, the unique, patented SunTour slant parallelogram mechanism moves the derailleur cage at an angle approximating the rear gear cluster shape. This maintains uniform clearance between the guide pulley and the gear sprockets, assuring more stable driving and smoother shifting. SunTour derailleurs are unmatched in shifting speed and smoothness. (All rear derailleur models)

Non-Bending Mechanism

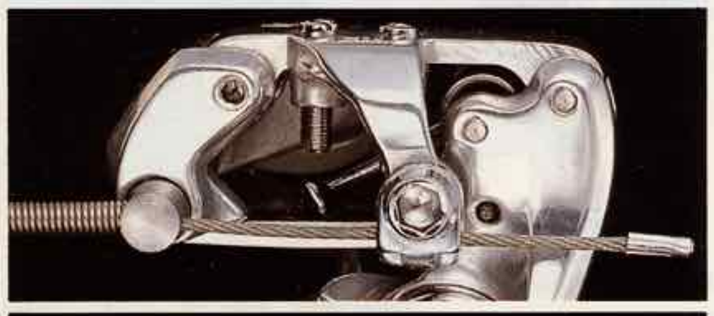

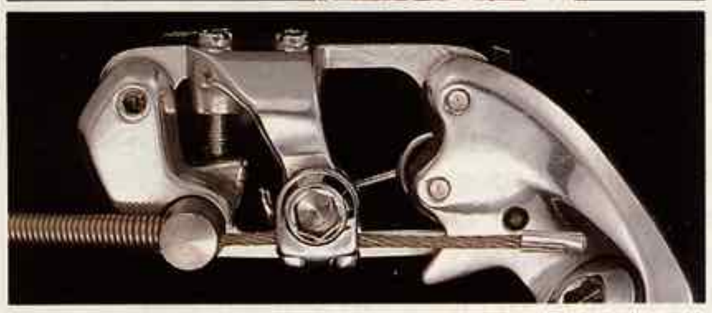

This mechanical feature allows the cable anchor bolt and the outer cable stop on the derailleur to pivot in such a way as to keep the inner shift cable straight regardless of the movement of the derailleur mechanism. Less friction and no binding result in smoother, faster shifting and reduced cable wear. (All rear derailleur models)

Light Alloy Bolts

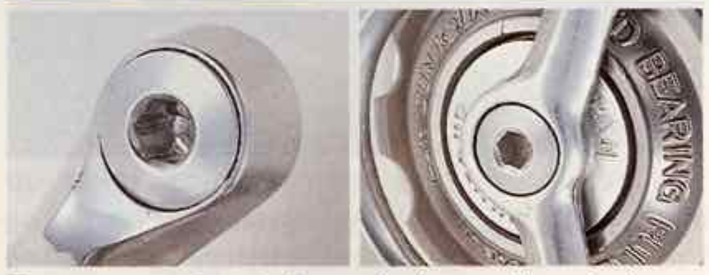

The mounting bolt and the pulley bolt are made of light alloy, which saves weight without sacrificing strength. This makes the Superbe Pro Rear Derailleur as light as 176 g, and the Superbe Rear Derailleur 164 g.

MicroLite Design

Every subcomponent has been rethought and reshaped to provide the most compact, most light and most smooth form possible. The component becomes a truly integrated unit. Other advantages are greater safety due to fewer protrusions and sharp edges, and a more attractive appearance.
(Superbe-Pro, Cyclone Mark-II & ARX)

Angle Adjustment

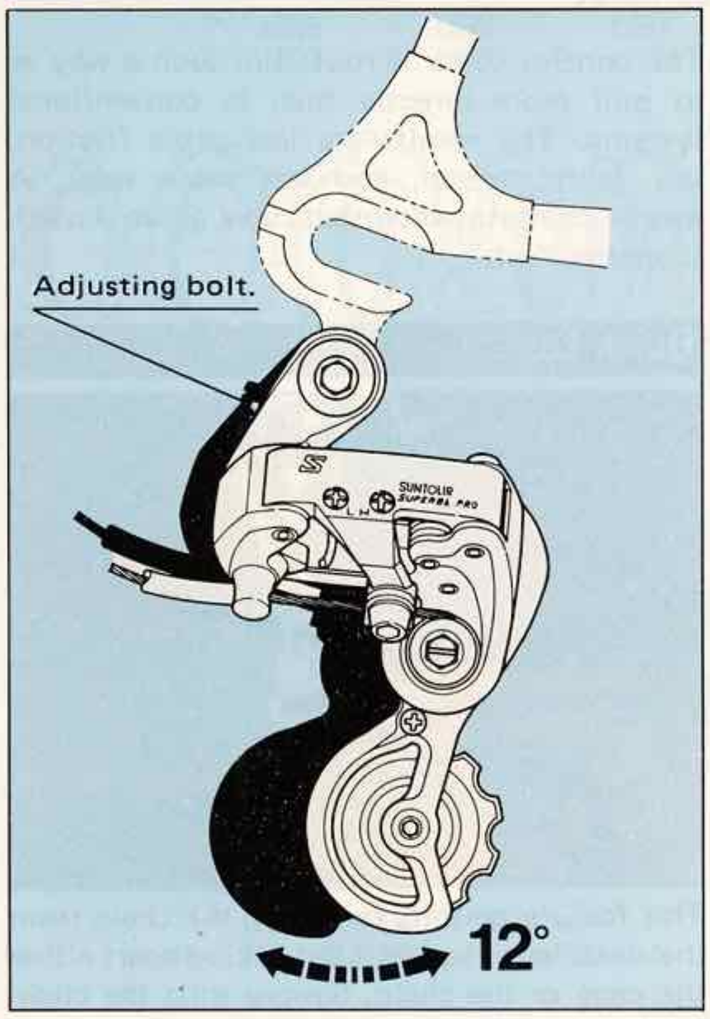

An adjusting bolt at the rear of the derailleur, just below the mounting bolt, insures perfect installation of the derailleur onto any type of rear frame dropout, regardless of the angle of the dropout. Moving the bolt in or our provides up to 20 degrees of adjustment for the derailleur body. (All rear derailleur models)

Stainless Steel Pivot Pins

Stainless steel is used for the derailleur pivot pins because it is non-corroding and non-distorting and can be polished to a low friction surface finish. SunTour precision polishes the stainless steel pivot pins to 1/100mm tolerance to eliminate any play in the parallelogram system. (Superbe-Pro & Superbe)

Sealed Bushing And Spiral Spring

Both sides of the tension spring are covered with sealed bushings made of derlin resin, which improves the water and dust protection efficiency.
The spiral spring, which is smaller and lighter than a coil spring, is used for the tension spring.
A conventional derailleur with coil spring creates tremendous tension on the cage when shifted from the smallest sprocket to the largest sprocket. This tension ultimately increases pedaling friction and decreases shifting efficiency. The spiral spring has a feature, which minimizes the tension on the chain with the chain on any sprocket.
(Superbe-Pro & Superbe)

Derailleur Pulley

The pulley is that part of the derailleur which works the hardest. It must tension the chain; keep it aligned with the rear sprocket; shift it to another sprocket; and keep spinning with minimal friction loss while working in oil and grit. SunTour pulleys are made of delrin resin, a smooth, light, tough material which is self-lubricating and resists barasion. They ride on special self-lubricated metal bushings which are covered with dust seals. The system requires no oil or grease to function efficiently. (Superbe)

Self-locking Adjusting Screws

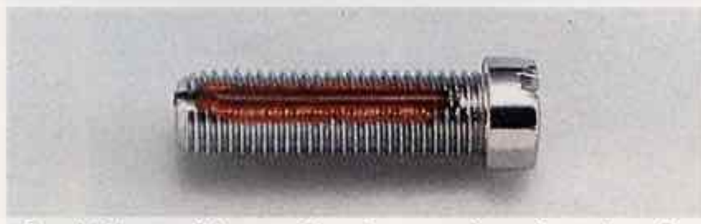

The high and low adjusting and angle adjusting screws have threads with special nylon insert called "Nylon 6." This locks the screw in place and eliminates the risk of losing adjustment under severe vibration. Either a Phillips (+) or a cabinet (–) screwdriver can be used.
(Superbe-Pro & Superbe)

Twin Pivot Derailleur Cage

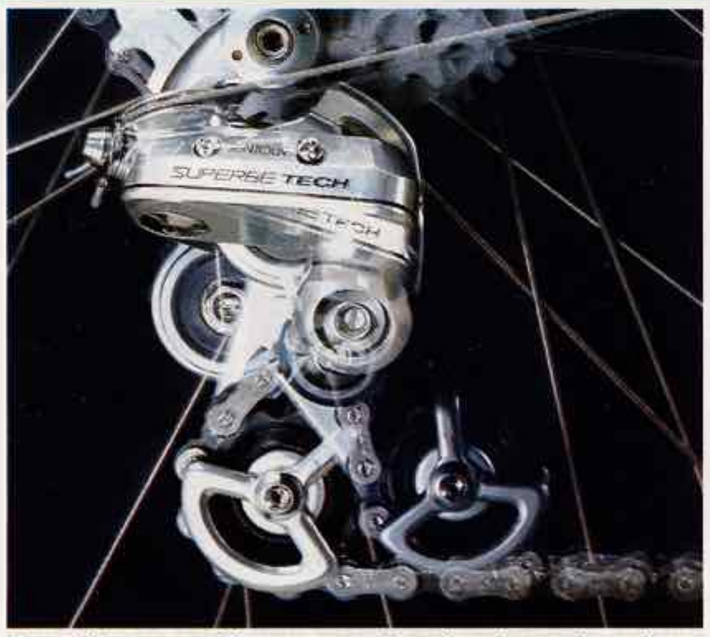

Derailleur performance is closely related to precise positioning of the chain in relation to the cog; and ultrawide gearing requires even greater precision in chain and pulley positioning under widely varied conditions.
The SunTour twin pivot touring derailleur cage produces noticeable shifting improvement on wide-range clusters, regardless of the tooth differential between adjoining cogs.
The cage, as the name implies, pivots at two points. The upper jockey wheel, which is responsible for guiding the chain, pivots around the same spring-loaded pivot as the standard SunTour cage. This permits the upper wheel to maintain an almost constant distance from the cog, regardless of gear position or cog size. The lower jockey wheel, responsible for maintaining chain tension, pivots around the axis of the upper jockey wheel. The upper wheel itself spins about an enclosed spring which acts on the cage arm to which the lower wheel is mounted, and provides the tension on the slack part of the chain.
Thus, the cage itself is doubly articulated; and it is this double articulation which permits the jockey wheel to be the same distance from each cog of the freewheel.
Other derailleurs use double articulation. Some have one pivot at the mounting bolt, and another where the cage attaches to the body. The distance between the two pivots in these designs, however, results in an undesirable amount of change in chain wrap (the number of chain rollers actually engaged with the cog). Another design uses a double-parallelogram-articulated cage with a single spring. It lacks the advantages of SunTour's second spring, derailleur body design, and slant parallelogram geometry. (Superbe-Tech, MounTech, AG-Tech & Trimec)

Direct Cable Pull

Comparison between Superbe-Tech and Other Conventional Rear Derailleurs

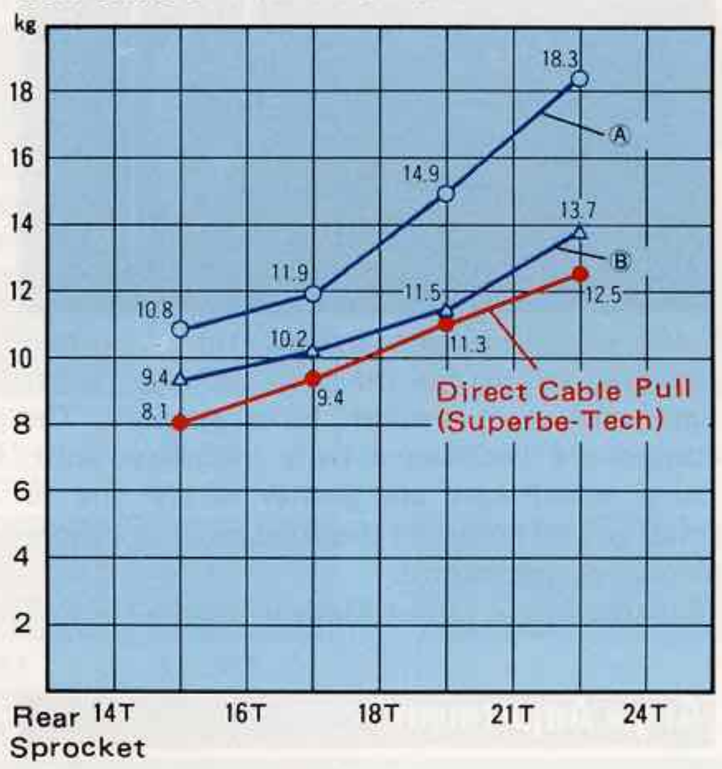

The control cable is routed in such a way as to pull more directly than in conventional systems. The results are less cable friction, less cable stretch, and less cable wear. A special chainstay-mounted cable guide is used.
(Superbe-Tech)

Quick Cage

This feature permits removing the chain from the derailleur cage without taking apart either the cage or the chain. Simply shift the chain onto the smallest rear sprocket and remove it from the cage. The wheel can then be removed without interference from the chain; and both chain and derailleur can be serviced without getting into each other's way.
(All S-type & GT-type, AR, SEVEN, HONOR, MIGHTY CLICK, TRIMEC & CAP)

Sealed Mechanism

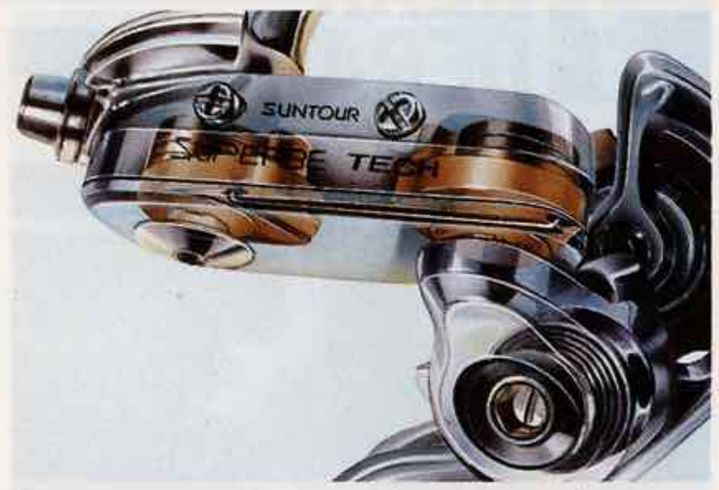

The mechanism which determines the geometry of the derailleur body's movement is permanently lubricated and completely sealed from the elements during operation. (Superbe-Tech)

Easy Cable Threading

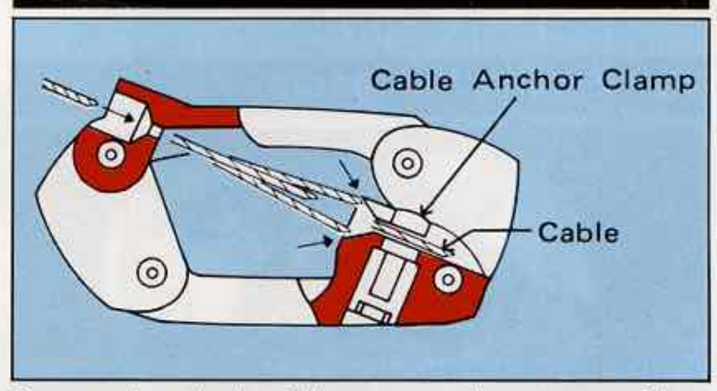

Conventional derailleurs require you to first thread the cable through the cable stop, and through the cable clamp. The Easy Cable Threading feature of SunTour MicroLite derailleurs allows the same motion which threads the cable through the cable stop to correctly seat it in the clamp. Frayed cable ends are thus eliminated.
(Cyclone M-II, ARX, AR & Mountech)

Adjustable Spring Tension

The tension of the spring which takes up chain slack can be easily adjusted by removing the derailleur cage and repositioning its spring tension axle in relation to the spring tab. SunTour derailleur springs are designed to provide the most stable tension and strength for the amount of space used. (Most of all rear derailleur models)

FRONT DERAILLEUR

Double Arm Stainless Pivot

The double pivot arms on the derailleur cage add strength and rigidity; and the stainless steel pivot pins, machined to 1/100 mm tolerance, eliminate and friction loss in shifting. (Superbe-Pro)

Endless Band Mounting

The "endless band" mounting method uses a stainless steel band instead of traditional mounting clamps. The clamp is tightened around the tube by a single bolt which is recessed into the body of the component. The even clamping pressure eliminates the risk of deforming thin tubing; and the thin band and recessed bolt eliminate protrusions and permit a clean, compact shape. (Superbe-Pro, Superbe & Cyclone Mark-II)

Compact Derailleur Cage

The MicroLite concept is embodied in the derailleur cage, which is much smaller than conventional cages, yet has a 14T gear capacity. The cage is heat treated to withstand frequent, rough shifting. (Superbe-Pro)

Heat Trated Cage

Heat treating the derailleur cage makes it substantially stronger and gives a smoother finish, resulting in less friction with the chain, faster shifting, and greater reliability. SunTour tests show negligible wear after 10,000 consecutive shifts on specially designed test equipment. (Superbe-Pro, Superbe, Cyclone Mark-II, BL, ARX, AR, NSL & TRIMEC)

Two-Way Cable Setting

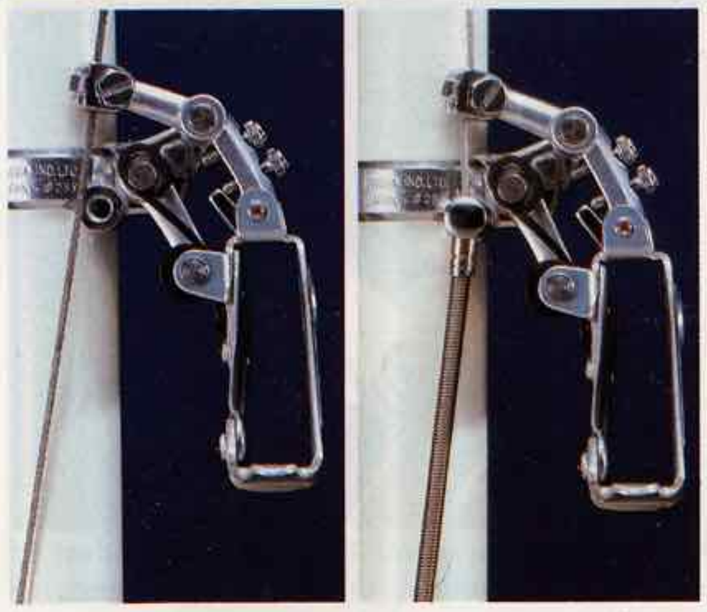

The removable cable housing stop on derailleurs with this feature allow either bare control cable or cable with outer housing to be used, depending on frame design or personal preference. (Cyclone Mark-II hinged-type, ARX, BL & MounTech)

Slant Parallelogram Front Geometry

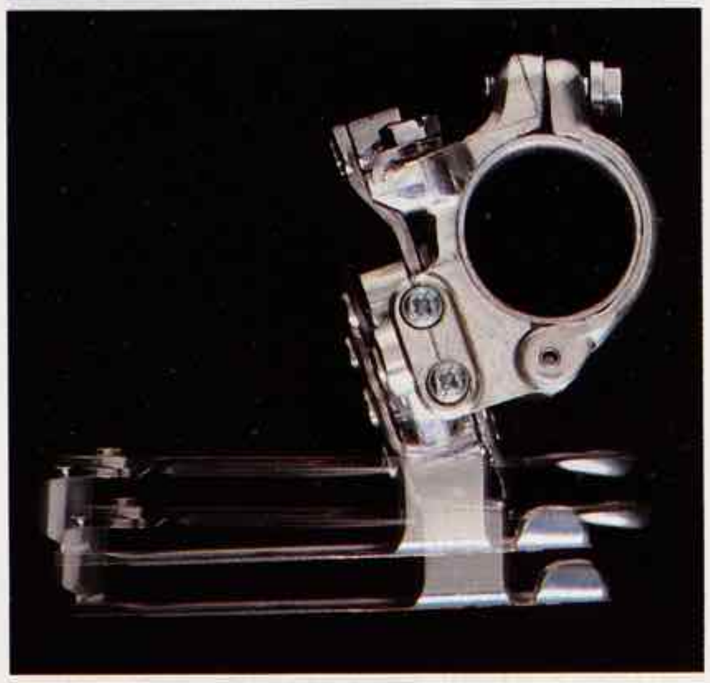

The geometry of the front derailleur moves the cage diagonally as it shifts the chain between chainrings. This results in crisper, smoother shifts. (NSL, Compe-V & Spirt)

Drawbridge System

This unique idea on the front derailleur cage enables you to remove the chain from the derailleur by unscrewing one allen bolt. By eliminating the use of a chain roller, a small cage with large capacity is possible. (NSL)

SHIFT LEVER

Ergonomic Lever Design

The forged light alloy lever handle is beautifully streamlined and sculptured to fit perfectly between the thumb and index finger with the lever in any position.

THUMB SHIFTER

Ergonomic means Human Engineering applied to objects in a way which improves human efficiency. Applied to the MicroLite Power Thumb Shifter, it works like this:
When you have to shift gears while riding on a rough surface, in heavy traffic or with a heavily loaded bike, it is best to be able to keep both hands on the handlebar. The ergonomic design of the MicroLite Power Thumb Shifter permits you to shift through the entire range of the derailleur using only your thumb to push the lever, or your index finger to pull it. In this way, you can maintain a firm grip on the bar with both hands.

Double Friction Locking Mechanism

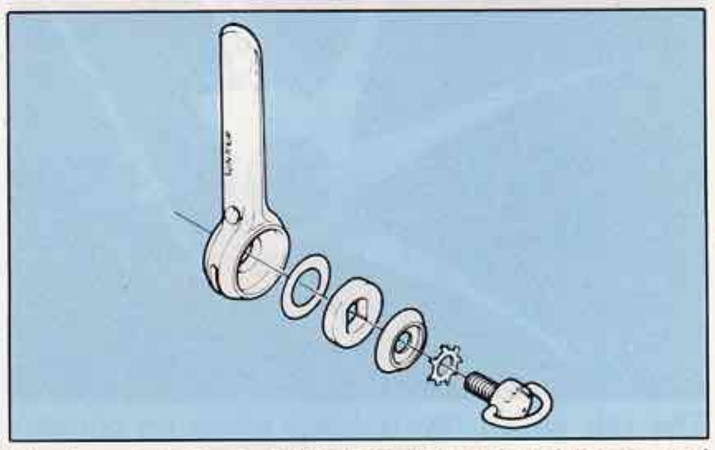

During a race, a shift lever is moved back and forth hundreds of times. A conventional lever can get loose and move unintentionally. SunTour's new Double Friction Locking Mechanism eliminates this problem. Lever friction can be adjusted while riding. (Superbe-Pro)

Micro Light

Light alloy hardware and plastic washers are used to save weight. The weight is only 46 g, including the stud, which makes these lightest among this type of levers. (Superbe-Pro)

Integral Cable Guide

The MicroLite levers incorporate a tunnel cable guide as part of the lever itself, eliminating the traditional separate tab which keeps a slack cable in the take-up groove. (Top-Mount)

One-Key Maintenance

All assembly, disassembly and adjustment on the MicroLite shift levers can be done with a single 5 mm allen key. (Top-Mount)

Internal Travel Stops

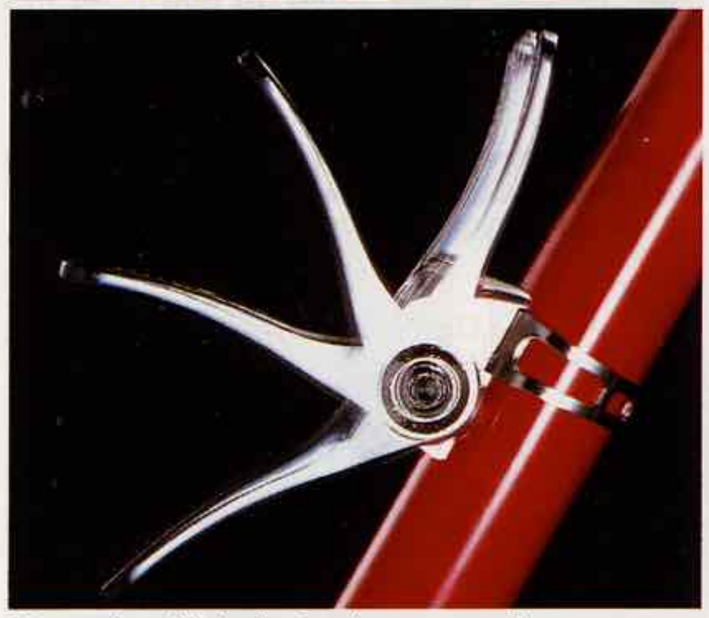

The tab which limits lever travel on conventional shift levers has been redesigned to work internally, thereby eliminating yet another protrusion. Lever movement is a full 140 degrees, which provides reliable operation for five, six or seven speed freewheels. (BL & Top-Mount)

Synchro-Shift Mechanism

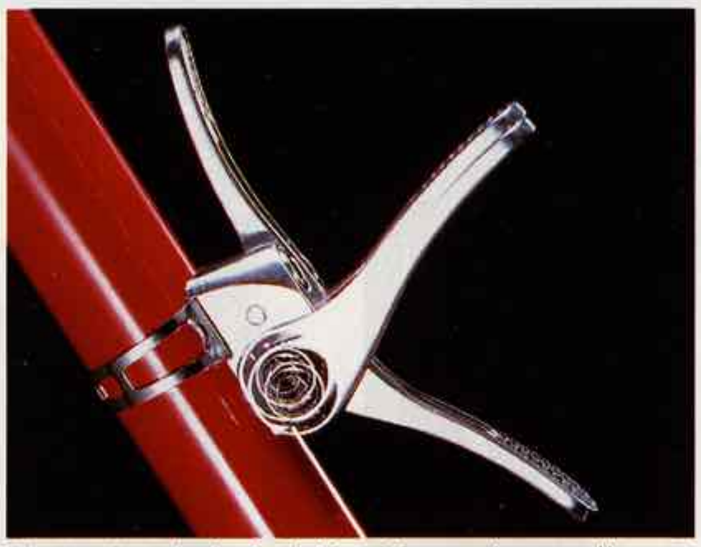

When the chain is shifted from the smallest to the largest sprocket at the rear, it tends to angle in such a way that it hits the inside of the front derailleur cage. With conventional levers, the front lever must be adjusted to center the cage over the chain. The Synchro-Shift mechanism makes that adjustment automatically and perfectly as the lever controlling the rear derailleur is moved.

When the rear derailleur is shifted in a conventional system, efficient gear changing requires a slight "overshift," followed by an immediate compensating return movement of the lever. SunTour's Synchro-Shift makes that adjustment automatically, eliminating the need for skilled derailleur handling techniques. (Top-Mount)

One-Hand Lever Action

Human engineering plays an important part in SunTour product design. The MicroLite shift levers are designed so that two-step shifting (changing both the front and rear derailleur to select the appropriate gear ratio) can be done simultaneously and with one hand. The result is quicker gear changes with greater safety, as the rider's other hand need never leave the handlebars. (Top-Mount & Trimec)

Endless Band Mounting

The "endless band" mounting method is used on shift levers as well as front derailleurs. The clamp is tightened around the tube by a single bolt which is recessed into the body of the component. The even clamping pressure eliminates the risk of deforming thin tubing; and the thin band and recessed bolt eliminate protrusions and permit a clean, compact shape. (Top-Mount)

Power Ratchet Mechanism

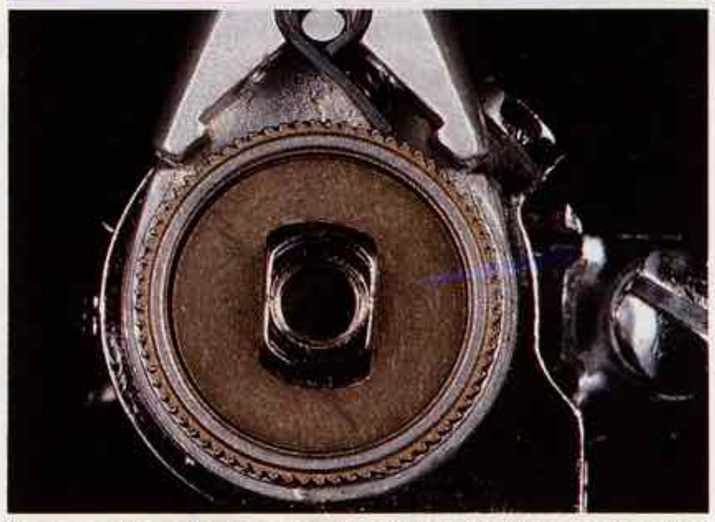

Comparison Between Regular and Power Lever

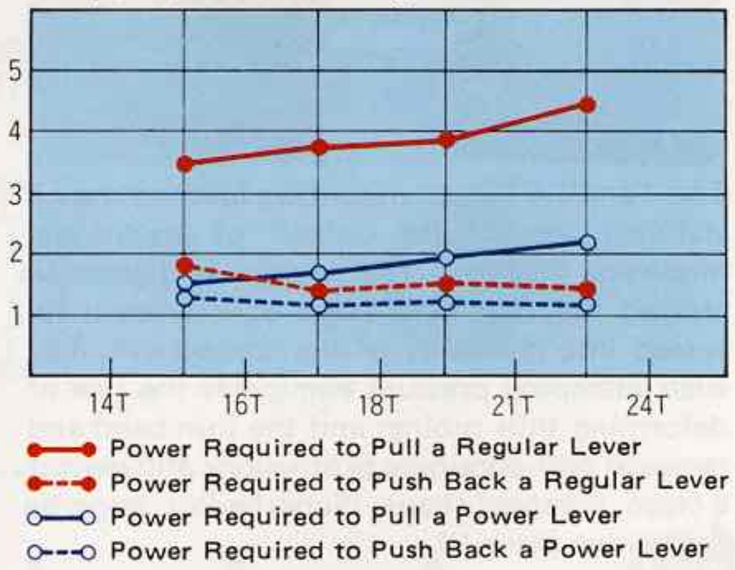

Developed a number of years ago by SunTour and protected by world-wide patents, this unique engineering design eliminates the lever resistance found in ordinary shift levers. Levers without this feature require positive friction to stay in the selected gear position, but the Power Shifter has no frictional resistance as shown in the chart above. Instead, a finely calibrated ratchet built into the lever mechanism resists the pull of the derailleur spring and helps to position the lever more precisely on downshifts to a lower gear at the rear (or a larger chainring at the front). On shifts in the opposite direction, the derailleur spring helps to move the lever. The result is perfectly balanced operation on both upshifts and downshifts. (Bar-Con, Power Thumb Shifter, Mighty Shifter-II, PDL-M, PSL-M, PUB-10 & PUB-5)

CALIPER BRAKE

Vernier Quick Release

Because the brake arms can be accurately positioned with the quick release at any distance from the wheel rim, minute adjustment of brakes is possible. Major parts are made of stainless steel, eliminating any problems with rust. (Superbe-Pro)

Brake Shoe

Comparison of stopping distance between SunTour and others

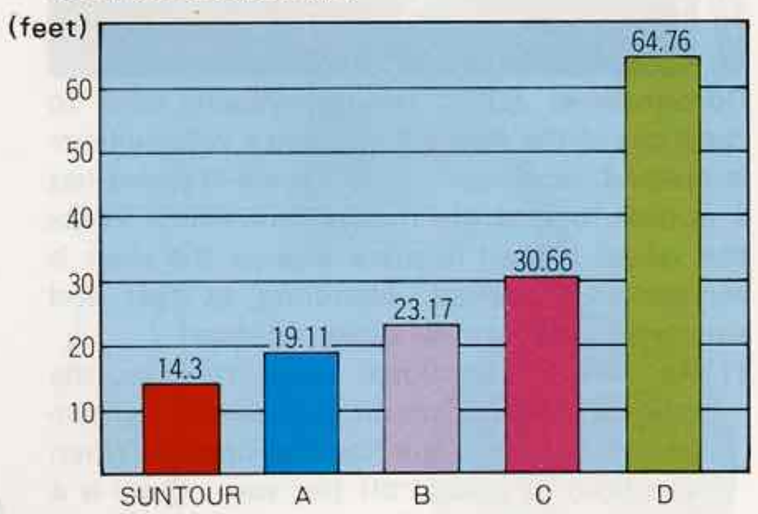

The Superbe-Pro brake shoes are specially designed to produce not only maximum wet and dry stopping power, but also to provide precise speed control in high-speed riding. Highly rated by Bicycling Magazine of U.S.A. as well as other testers.

PEDAL

Interchangeable Pedal Cages

The pedal cages are attached to the bodies by allen head bolts. The cage can be replaced quickly whenever necessary, by just unscrewing the allen head bolts with a 2.5 mm allen key and mounting the new cages. The same body can be used for track type of road type pedals on Superbe-Pro models. (Superbe-Pro, BMX & XC-II)

Ground Clearance

By cutting off the front outside of the pedal cage, the ground clearance angle has been increased from 26 degrees to 31 degrees, which enables cornering at higher speed. (Superbe-Pro)

Sealed Bearing

High precision sealed bearings are smoother and more durable than conventional bearings. They are completely dust- and water proof, guaranteeing consistent performance. (Superbe-Pro & BMX)

Oval Pedal Cage Design

Quick and Sure Foot Gripping

The symmetrical, double sided design eliminates hunting for the "right" surface when you have to get power on now. (XC-II)

Wider Foot Support

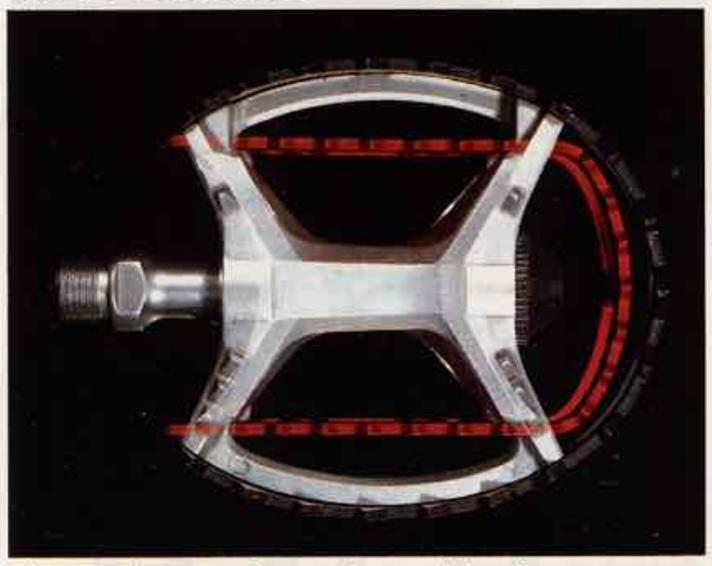

The oval cage shape gives wider foot support and permits wearing any kind of shoes, while the tooth design assures a firm grip. (XC-II)

FREEWHEEL

Versatile Freewheel Design

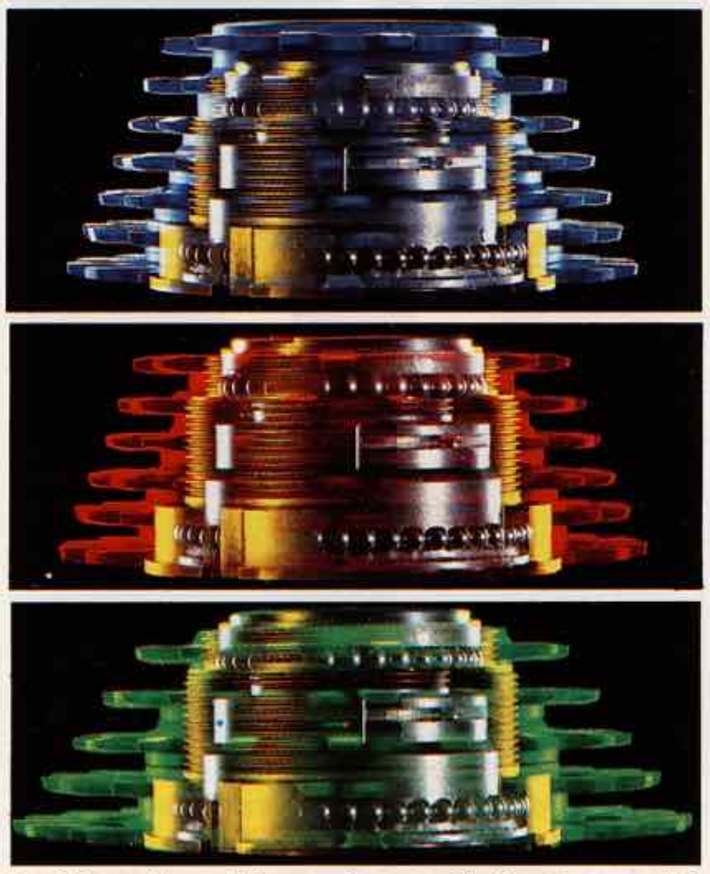

SunTour New Winner is a revolutionary multiple freewheel which lets you build a 5, 6 or 7 speed gear combination on the same freewheel body.

This 5, 6 or 7 speed gear combination capability is possible because of the new body's simple yet precise patented design, the first in the world to have achieved this feature. Another unique feature is the Double Adjusting Nut Construction, also found only on SunTour's New Winner freewheels, giving precise, easy adjustment for smooth and accurate freewheel performance, just like hubs and pedals.

This design allows quick and easy adjustment by a simple tightening or loosening of two nuts on the freewheel body. These features make the New Winner not only the first in the world with this advanced technology, but also the ultimate freewheel in precision, smoothness and simplicity!

Slant Cut Teeth

Chain Movement When Shifting

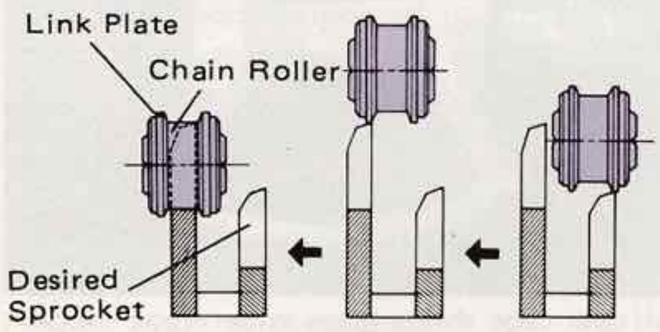

The tips of the sprockets' teeth are beveled, which helps accurate shifting.

"Zigzag" Tooth Profile

For more efficient gear changing on a wide ratio freewheel, the teeth are tipped rather sharply and literally "zigzaged" like saw blades, to precisely for each link plate of the chain as it is alternately connected externally and internally. (26 through 34 tooth sprocket on all freewheel models)

Freewheel End-Plate

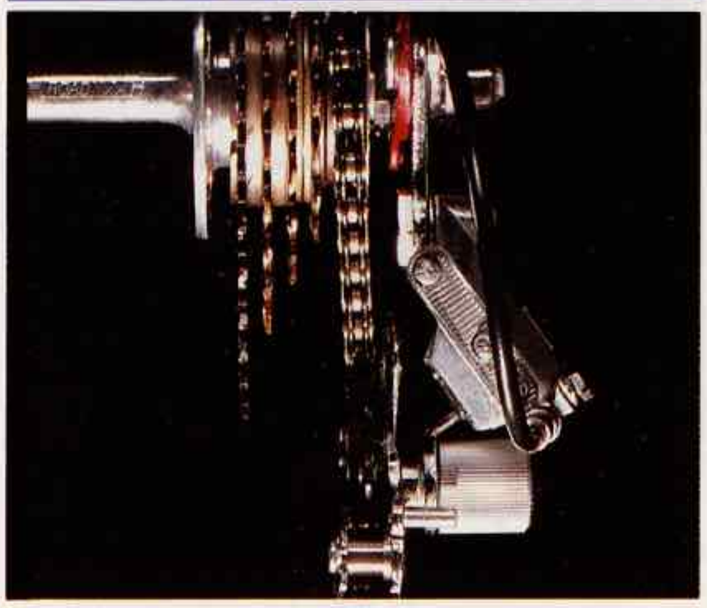

The SunTour Perfect Freewheel features an integral end-plate which prevents the chain from overshooting high gear and jamming between the freewheel and the frame dropout. The risk of damage in the event of a misadjusted derailleur is minimized. (AG)

ULTRA-6 CHAIN

Ultra-6 Chain

This 1/2" x 3/32" lightweight chain for use with the New Winner Ultra Size Freewheel has the following exclusive features:

Thinner link plates and shorter chain pins reduce the weight of the chain, and narrower width allows it to meet the clearance specifications between the sprockets of the New Winner Freewheel. Other dimensions are the same as standard chains, so the Ultra-6 can be used with all freewheels.

The chamfered inner surface of the link plates helps the chain slide more efficiently and quickly on and off the sprocket teeth, resulting fast, accurate shifting with no slippage between gears.

A special hardened finish provides smoother changing.

OTHERS

Precision Bearing Surface

The performance and durability of a freewheel and other components depend on manufacturing care. SunTour takes an extra step by precision-grinding all bearing surfaces both before and after heat-treating, to insure a hard, absolutely true surface. (Superbe Hub, Superbe Head Set, Superbe Bottom Bracket, Superbe Pedals, Superbe Track Cog, MicroLite Freewheel, New Winner Freewheel, Perfect Type Ultra-6 Freewheel & Pro-Compe Freewheel)

Dual Quick Release

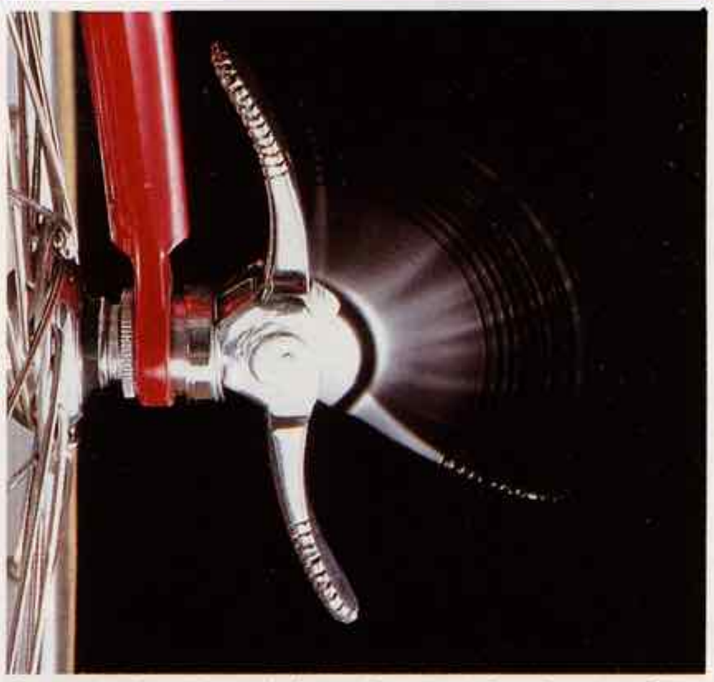

Conventional quick release wheels tend to drop out of the frame if the quick release lever is opened. SunTour's Dual Quick Release has a double lock safety mechanism which keeps the wheel locked in place even if the lever is accidentally opened. Handling as fast and simple as conventional quick releases:

(1) As with conventional quick releases, the lever operates a cam on the skewer, tightening the hub onto the frame dropouts. When the lever is closed all the way, there is a "click" which signifies that the hub is locked into place.

(2) Even if the lever is opened 140 degrees, the wheel will remain locked in place.

(3) When the lever is opened more than 140 degrees, the lock mechanism releases with a "click" sound.

Double-Sealed Mechanism

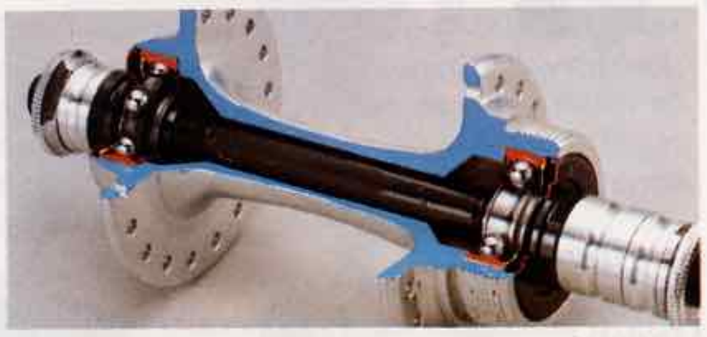

The advantages of sealed bearings have been common knowledge to engineers for decades. But the high degree of precision, low need for maintenance, and long, dependable life which they provide has only been available to bicyclists in premium priced products. But SunTour advanced bicycle technology has created a double sealed bearing hub with the precision, smoothness and maintenance free durability of high-priced sealed hubs, at a price which any cyclist can afford.

Precision Chain-Line Adjustment

The popularity of cotterless cranks has magnified the problem of unstable chain line, which is caused by the wear of the crank arm against the spindle taper.

The SunTour Sealed Bearing Bottom Bracket deals with this problem by making it possible to shift the spindle within the bottom bracket shell, thereby assuring perfect chain alignment throughout the life of the crank arms.

Head Lock-up

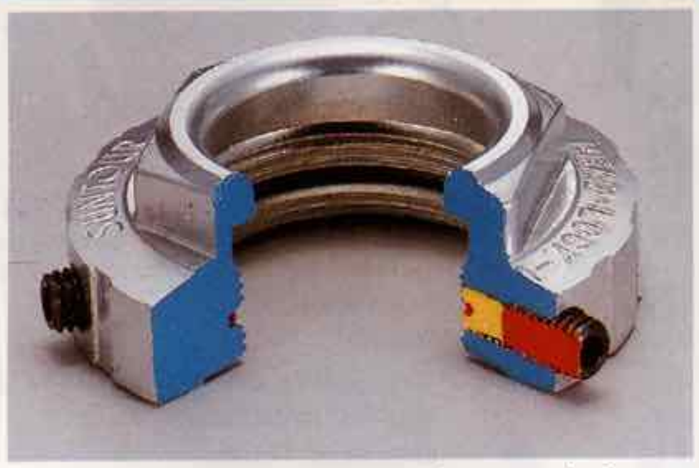

The head lock-up is another revolutionary SunTour BMX racing product. Its allen-head set screws gently tighten two nylon bushings against the fork threads, preventing the head set from working loose even under toughest racing conditions.

SYSTEM SYSTEM MECHANISM

Mighty-Click System Mechanism

Rear Derailleur With Mighty Click Mechanism

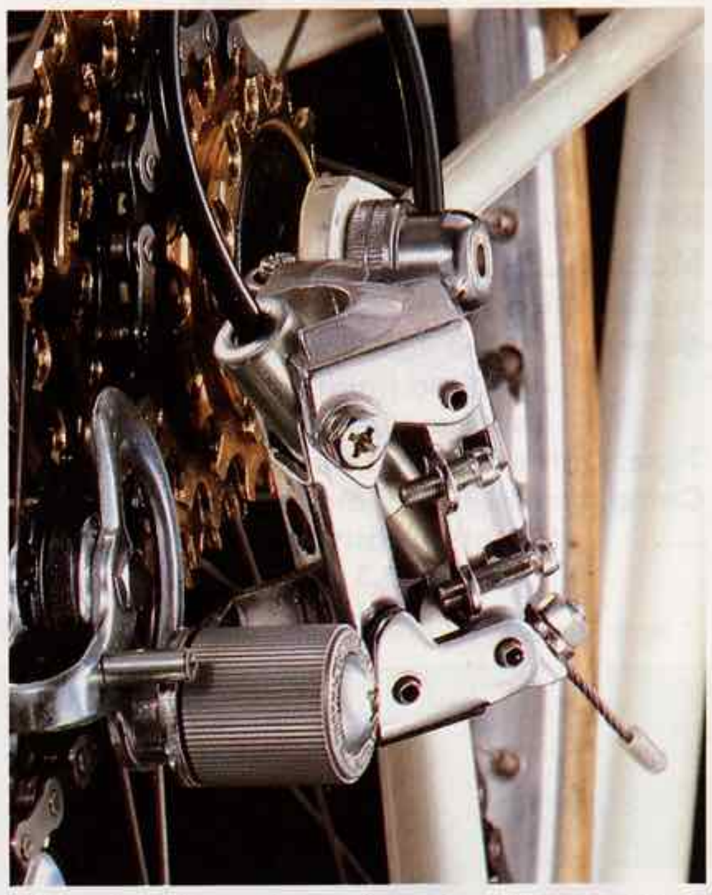

This derailleur is equipped with a unique mechanism which moves the chain accurately to the desired sprocket when used with the Mighty Click Shift Lever. This derailleur is also equipped with a Cable Tension Relief Mechanism, which eases excessive tensions on the cable. The Quick Cage permits removing the chain from the derailleur cage without taking apart either the cage or the chain.

Click lever

The SUNTOUR click lever has a shifting position device built into the control lever. Gears are defined by a clicking sound, and pre-selection is possible. A position indicator shows which gear the lever is in, making the system easy for inexperienced riders to use. There is a cable tensioning system in the rear derailleur of the click system which automatically compensates for cable stretching. Serrated cable adjusting bolts provide easy adjustment.

Trimec System Mechanism

Cable Tension Relief Mechanism (Cable Saver)

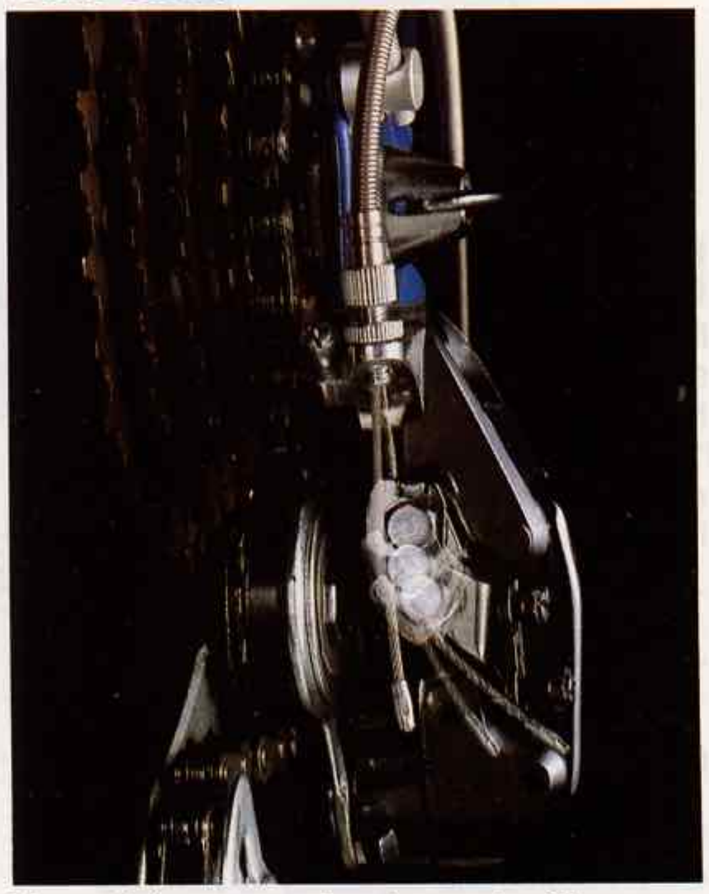

Most of the conventional rear derailleurs cannot be shifted unless the control lever is moved while turning the cranks. If the shift lever is moved without turning the cranks, the inner cable can be damaged.

The Cable Tension Relief Mechanism, a feature on the Trimec derailleur, maintains the correct tension on the cable and prevents cable damage even if the shift lever is moved without turning the cranks. Pre-select the gear position and, once you have started pedaling, the chain shifts to the pre-selected position.

Positive Click

Handling of the shift lever requires a little skill to shift the derailleur to the desired position. Not only beginners, but experienced riders as well, want to move the control lever to the right gear position without effort. The click mechanism built into the shift lever identifies the desired lever position with a "clicking" sound. The Cable Tension Relief Mechanism on the rear derailleur absorbs the tension on the cable and eliminates damage to the cable. The slight "overshift" required for efficient gear changing is followed by an automatic compensating return movement of the lever. This mechanism eliminates "chattering" of the chain in any position.

SUPERBE PRO

REAR DERAILLEUR
Model: RD-5200
Specifications
Material: Forged light alloy (Body)/Buff finish, Hard polyester resin (Pulley)
Largest rear sprocket: 26T
Total gear capacity: 25T (With Superbe rear end) (In case of front teeth difference below 12T)
Mechanism: Slant parallelogram Non-bending mechanism Top normal
Weight: 6.2 ozs. (176 gms.)
Other: Sealed bearing pulley as standard specification

SHIFT LEVER
Model: LD-3200
Specifications
Material: Forged light alloy (Lever)/ Anodized finish
Stainless steel (Clamp)/Fine finish
Type: Universal type/Double lever
Clamp diameter: 28.6 mm (1-1/8")
Mounting position: Down tube
Weight: 2.3 ozs. (64 gms.)

CALIPER BRAKES
Model: CB-3000 (CB-3100+CB-3200) CB-3100
Specifications
Material: Forged light alloy/Anodized finish
Type: Side pull with vernier quick release and tire guides
Size: Small
Shoe stroke: 1/64" (10 mm); (40–50 mm)
Weight: 11.6 ozs. (330 gms.) Pair
Other: Lock nut with allen key hole (5 mm) is available.

FRONT DERAILLEUR
Model:FD-2000
Specifications
Material: Light alloy (Body) Steel (Chain guide)/Heat treatment and chromium plating Stainless teel (Clamp band)
Gear capacity: 14T
Mechanism: Parallelogram, Endless clamp, Bare cable system, Low normal
Clamp diameter: 1-1/8" (28.6 mm)
Weight: 2.9 ozs. (82 gms.)

SHIFT LEVER
Model: LD-3250
Specifications
Material: Forged light alloy (Lever)/ Anodized finish
Steel (Brazed on fitting)
Type: Universal type/Double lever Brazed-on type
Down tube diameter: 28.6 mm (1-1/8")
Mounting position: Down tube
Weight: 1.6 ozs. (46 gms.) Pair

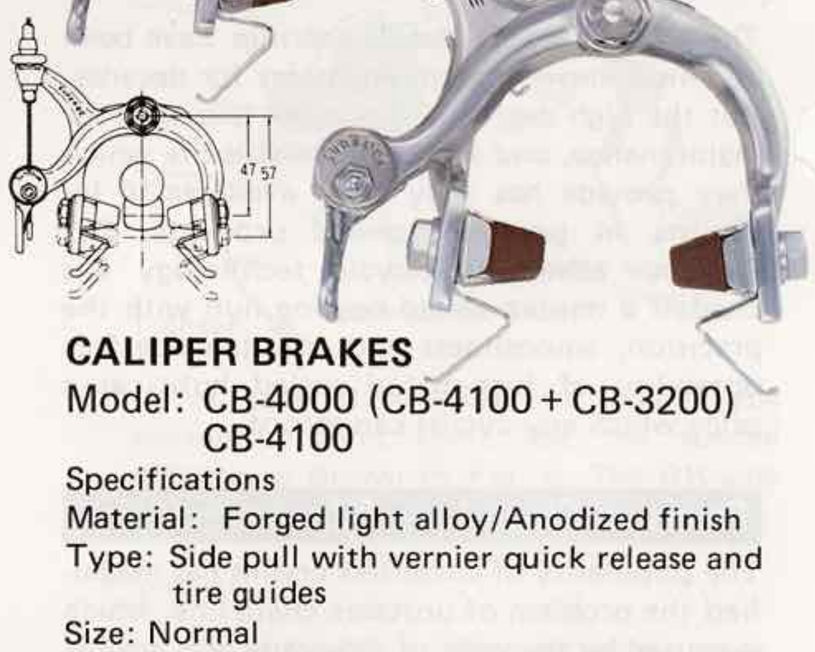

CALIPER BRAKES
Model: CB-4000 (CB-4100 + CB-3200) CB-4100
Specifications
Material: Forged light alloy/Anodized finish
Type: Side pull with vernier quick release and tire guides
Size: Normal
Shoe stroke: 1/64" (10 mm); (47–57 mm)
Weight: 12.2 ozs. (346 gms.) Pair
Other: Lock nut with allen key hole (5 mm) is available.

FORK ENDS
Model: EF-160
Specifications
Material: Forged steel
Type: Road type
Thickness: Front 1/4" (6 mm) Rear 9/32" (7 mm)
Hub axle diameter: Front 11/32" (9 mm) Rear 13/32" (10 mm)
Weight: 185 gms. Including adjusting screw and bolt.

ROAD HUB
Model: BH-1500
Specifications
Material: Forged light alloy (Body)/ Anodized finish Cr-Mo (Axle)
Mechanism: Special sealed bearing integrated Dished & Slant cut flange Double sealed mechanism
Type: Quick release type/Small flange
Locknut-to-locknut dimension:
Front 100 mm
Rear 120 mm (5-speed, Ultra-6-speed) 126 mm (6-speed, Ultra-7-speed)
Spoke drilling: 28H, 32H, 36H
Thread: BC 1.37" x 24T
Weight: 18.4 ozs. (520 gms.)Pair 100-126 mm

BRAKE LEVER
Model: CB-3200
Specifications
Material: Light alloy die-cast (Bracket) Light alloy (Lever) with anodized finish.
Type: Hooded lever with rubber cover
Clamp diameter: 15/16" (23.8 mm) (24.0 mm)
Weight: 7.7 ozs. (219 gms.) Pair with cable and cable clips

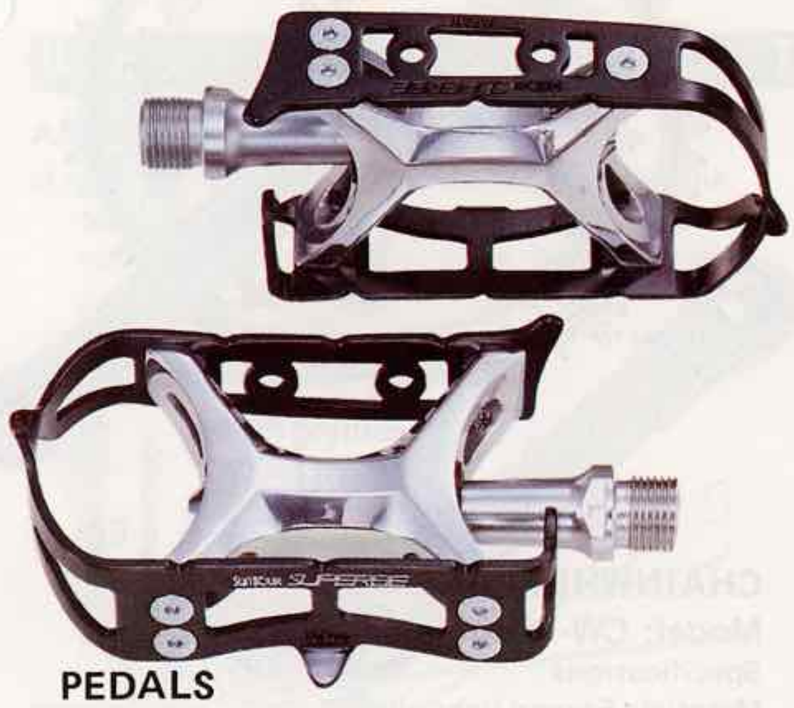

PEDALS
Model: PL-4000
Specifications
Material: Forged light alloy (Body) with anodized finish. Light alloy (Plate) with anodized finish.
Cr-Mo (Spindle) with allen key hole (6 mm).
Type: Road type/Detachable plate, Sealed bearing
Width: 2-3/8" (60 mm)
Thread: 9/16" x 20T (English)
14 x 1.25 (French)
Weight: 10.2 ozs. (290 gms.) Pair
Other: Interchangeable with Track type plate

PEDALS
Model: PL-2000
Specifications
Material: Forged light alloy (Body) with anodized finish.
Light alloy (Plate) anodized finish.
Cr-Mo (Spindle) allen key hole (6 mm).
Type: Track type/Detachable plate, Sealed bearing.
Width: 2-3/8" (60 mm)
Thread: 9/16" x 20T (English)
14 x 1.25 (French)
Weight: 9.8 ozs. (278 gms.) Pair
Other: Interchangeable with Quill type plate

TRACK HUB
Model: BH-1600
Specifications
Material: Forged light alloy (Body)/ Anodized finish
Cr-Mo (Axle)/Chromium finish
Mechanism: Sealed bearing,
Double sealed,
Solid flange
Type: Large flange/Single thread
Locknut-to-locknut dimension: Front 100 mm, Rear 120 mm
Spoke drilling: 20H, 24H, 28H, 32H, 36H
Sprocket thread: 1.37" x 24T
Lock ring thread: 1.29" x 24TL
Axle nut thread: Front M9 x 1,
Rear MIOX 1
Fork end clearance: Front 9 mm,
Rear 10 mm
Weight: 19.2 ozs. (545 gms.) pair

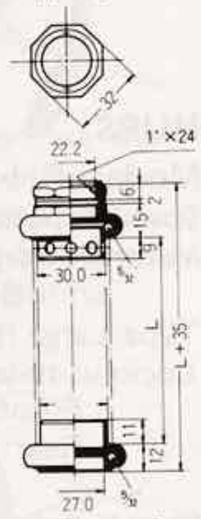

HEAD SET
Model: HS-150
Specifications
Material: Forged light alloy/Anodized fish,
Ground Cr-Mo ball race for precision
Type: Road & Track type
Thread: 1" x 24T (English)
25 x 1 (French)
Other: Itallian size
Steel ball diameter: 5/32"
Weight: 3.9 ozs. (110 gms.)

TRACK HUB
Model: BH-1700
Specifications
Material: Forged light alloy (Body)/ Anodized finish
Cr-Mo (Axle)/Chromium finish
Mechanism: Sealed bearing,
Double sealed,
Solid flange
Type: Large flange/Double thread
Locknut-to-locknut dimension: Front 100 mm, Rear 120 mm
Spoke drilling: 20H, 24H, 28H, 32H, 36H
Sprocket thread: 1.37" x 24T
Lock ring thread: 1.29 x 24TL
Axle nut thread: Front M9 x 1,
Rear M10 x 1
Fork end clearance: Front 9 mm,
Rear 10 mm
Weight: 19.0 ozs. (540 gms.) pair

RACING SPROCKET
Model: HC-100
Specifications
Use: Track hub only
Material: Cr-Mo steel
Chain: 1/2" x 1/8",
1/2" x 3/32" (Special)
Thread: 1.37" x 24T (English)
Surface finish: Ground for precision

Sprocket	Weight
12T	0.9 ozs. (26 gms.)
13T	1.1 ozs. (32 gms.)
14T	1.4 ozs. (41 gms.)
15T	1.7 ozs. (49 gms.)
16T	2.0 ozs. (57 gms.)
17T	2.4 ozs. (68 gms.)

SEALED BEARING JOCKEY WHEEL
Model: BP-100
Specifications
Material: Delrin resin
Mechanism: Sealed bearing integrated
Width: 10 mm
Weight: 1.1 ozs. (30 gms.)Pair

SUPERBE

REAR DERAILLEUR
Model: RD-5300

Specifications
Material:
Forged light alloy (Body and Cage)/Buff finish
Derlin resin (Pulley, Bushing)
Largest rear sprocket: 23T (With Superbe rear end)
Total gear capacity: 22T (In case of front teeth difference below 12T)
Mechanism:
Slant parallelogram
Non-bending mechanism
Top normal
Weight: 5.7 ozs. (163 gms.)

FRONT DERAILLUER
Model: FD-3000

Specifications
Material:
Light alloy (Body)/Anodized finish
Steel (Chain guide)/Heat treatment and chromium finish
Stainless steel (Clamp band)
Gear capacity: Below 18T
Mechanism: Parallelogram Cable guide option
Low normal
Clamp diameter: 1-1/8" (28.6 mm)
Weight: 3.2 ozs. (90 gms.)

SHIFT LEVER
Model: LD-2000

Specifications
Material:
Forged light alloy (Lever)/Anodized finish. Stainless steel (Clamp & bolt)/ Electrically polished finish.
Type: Universal type/ Double lever
Clamp diameter: 1-1/8" (28.6 mm)
Mounting position: Down tube
Weight: 2.8 ozs. (78 gms.) with lever cap

SHIFT LEVER
Model: LD-2050

Specifications
Material:
Forged light alloy (Lever)/Anodized finish.
Stainless steel (Brazed-on hardware)/ Electrically polished finish
Type: Universal type/Double lever
Borazed on type
Down tube diameter: 1-1/8" (28.6 mm)
Mounting position: Down tube
Weight: 2.3 ozs. (64 gms.) with lever cap

HUBS
Model: RH-1000

Specifications
Material: Forged light alloy/Anodized finish. Ground ball race for precision
Type: Small flange/Quick release
Locknut-to-locknut dimension:
Front: 100 mm
Rear: 120 mm (5-speed, Ultra-6-speed)
126 mm (6-speed, Ultra-7-speed)
Steel ball diameter: Front 3/16", Rear 1/4"
Spoke drilling: 28H, 32H, 36H
Thread: 1.37"x24T(English) 34.7 x 1.0 (French)
Weight: 19.3ozs.(548gms.) Pair(100mm–120mm)
19.5ozs.(553gms.) Pair(100mm–126mm)

HUBS
Model: RH-2000

Specifications
Material: Forged light alloy/Anodized finish, Ground ball race for precision
Type: Large flange/Quick release
Locknut-to-locknut dimension:
Front: 100 mm
Rear: 120 mm (5-speed, Ultra-6-speed)
126 mm (6-speed, Ultra-7-speed)
Steel ball diameter: Front 3/16", Rear 1/4"
Spoke drilling: 28, 32H, 36H
Thread: 1.37"x24T(English), 34.7 x 1.0 (French)
Weight: 21.1 ozs. (599 gms.) Pair
21.3 ozs. (604 gms.) Pair

PEDALS
Model: PL-1000

Specifications
Material:
Forged light alloy (Body)/Anodized finish.
Light alloy (Plate) Anodized finish.
Light alloy die-cast (Dust cap)/Anodized finish.
Cr-Mo(Spindle)with allen key head (6mm)
Ground ball race for precision.

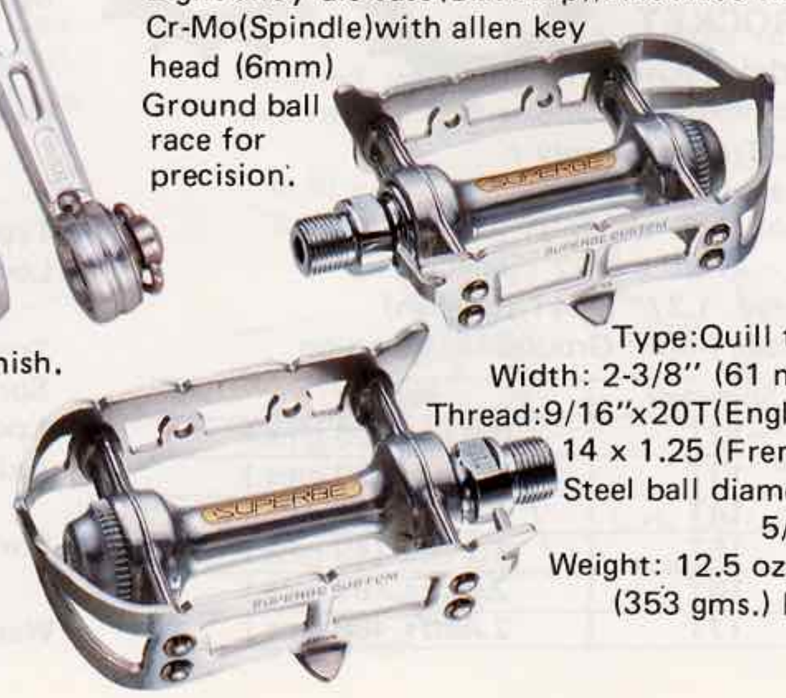

Type: Quill type
Width: 2-3/8" (61 mm)
Thread: 9/16"x20T(English)
14 x 1.25 (French)
Steel ball diameter: 5/32"
Weight: 12.5 ozs. (353 gms.) Pair

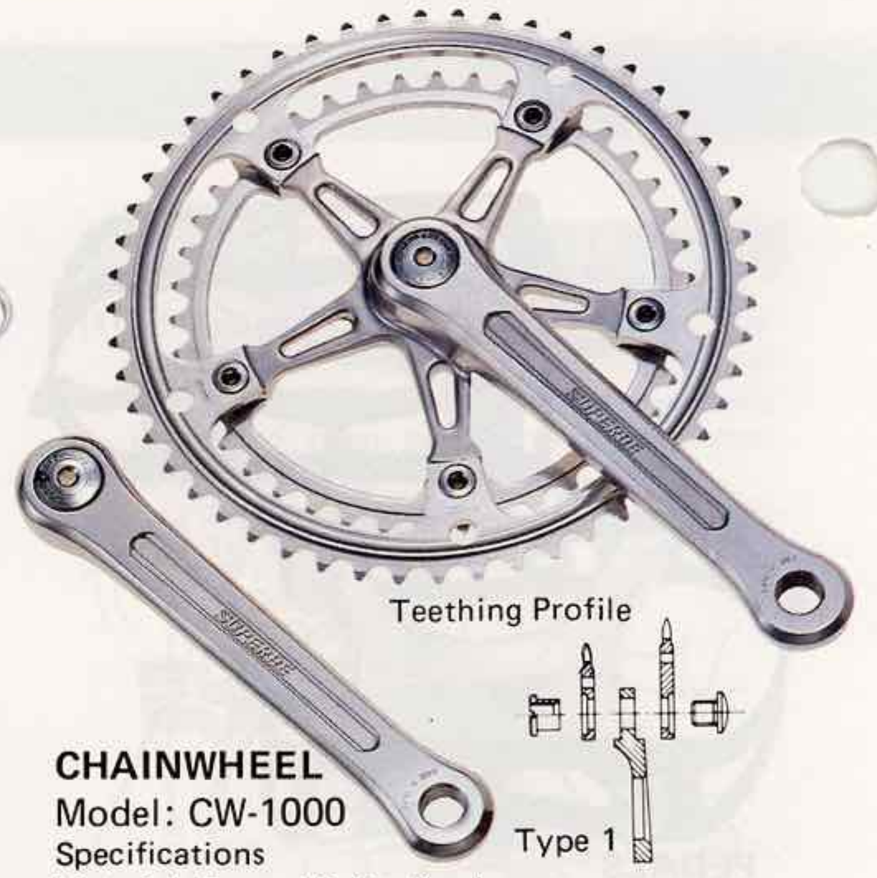

Teething Profile

Type 1

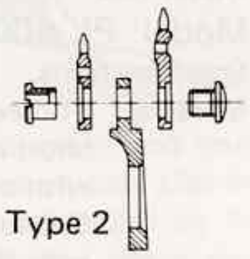

Type 2

CHAINWHEEL
Model: CW-1000

Specifications
Material: Forged light alloy/ Anodized finish. Steel (Dust cap) Chromium plating
Type: Cotterless/Road type
Chain: 1/2" x 3/32"
Available sprockets:
For inner 42, 43, 44, 45, 46, 47T
For outer 48, 49, 50, 51, 52, 53 54T
Crank arm length: 6-1/2" (165 mm), 6-19/32" (167.5 mm), 6-11/16" (170 mm), 6-51/64" (172.5 mm), 6-57/64 (175 mm)
Thread: 9/16"x20T(English), 14x1.25(French)
Thickness of chainwheel: Type1 – 5/32"(4 mm)
Type2 – 13/64"(5 mm)
Weight: 21.2 ozs. (600 gms.)
42 x 52T, 6-1/2" (165 mm)

BOTTOM BRACKET SET
Model: BB-100

Specifications
Material: Nickel chrome steel (Spindle)
Cr-Mo (Bolt)
Chrome (Steel ball)
Ground ball race for precision
Thread of cups: 1.37" x 24T (English), 35 x 1.0 (French), 36 x 24T (Italian)
B.B. width: 68 mm, 70 mm
Steel ball diameter: 1/4"
Weight: 10.6 ozs. (301 gms.)

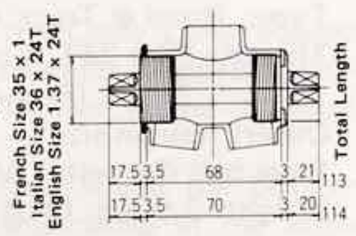

HEAD SET
Model: HS-100

Specifications
Material:
Steel (Body) with chromium plating
light alloy (Acorn nut) with anodized finish.
Chrome steel (Ball)
Ground ball race for precision
Type: Road type
Thread: 1" x 24T (English)
25 x 1 (French)
Other: Italian size,
Steel ball diameter: 3/16"
Weight: 6.1 ozs. (172 gms.)

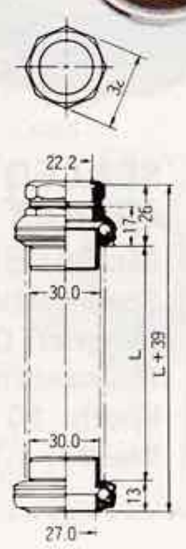

HUBS
Model:RH-3000

Material: Forged light alloy/ Buff finish. Ground ball race for precision
Type: Large flange
Lock nut to lock nut dimension:
Front 3-15/16" (100 mm),
Rear 4-3/4" (120 mm),
4-21/64" (110 mm)
Spoke drilling: 28H, 32H, 36H
Steel ball diameter: Front 3/16", Rear 1/4"
Thread: 1.37" x 24T (English)
34.7 x 1.0 (French)
Fork end clearance: Front 11/32" (9 mm), 5/16" (8 mm), Rear 13/32" (10 mm)
Weight: 18.9 ozs. (535 gms.) Pair

HUBS
Model: RH-4000
Specifications
Material: Forged light alloy/Buff finish
Ground ball race for precision
Type: Small flange
Locknut-to-locknut dimension:
Front: 3-15/16" (100 mm)
Rear: 4-3/4" (120 mm)
Steel ball diameter: Front 3/16", Rear 1/4"
Spoke drilling: 28H, 32H, 36H
Thread: 1.37" x 24T (English)
Fork end clearance: Front 11/32" (9 mm)
Rear 13/32" (10 mm)
Weight: 16.8 ozs. (475 gms.) Pair

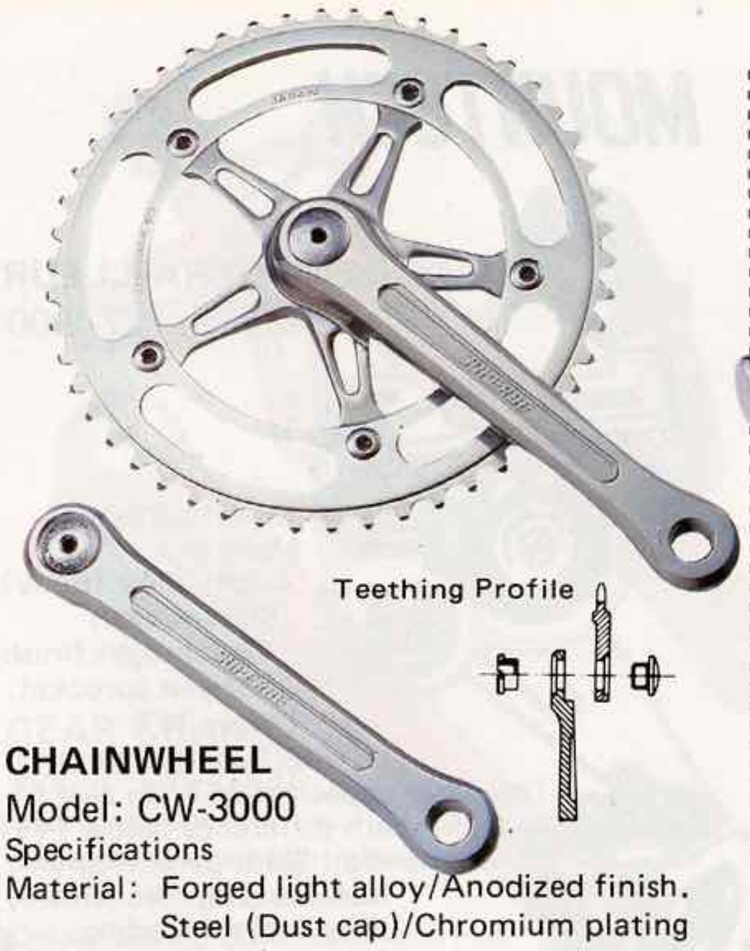

CHAINWHEEL
Model: CW-3000
Specifications
Material: Forged light alloy/Anodized finish.
Steel (Dust cap)/Chromium plating
Type: Cotterless/Track type
Chain: 1/2" x 1/8"
Available sprockets: 44, 45, 46, 47, 48, 49, 50, 51, 52, 53, 54T (3/32" sprockets can be used.)
Crank length: 6-1/2" (165 mm), 6-19/32" (167.5 mm), 6-11/16" (170 mm), 6-51/64"(172.5 mm), 6-57/64"(175 mm)
Thread:9/16"x 20T (English),14 x1.25(French)
Weight: 19.6 ozs. (556 gms.) (49T, 165 mm)

BOTTOM BRACKET SET Model:BB-300
Specifications
Material: Nickel chrome steel(Spindle), Cr-Mo (Fixing bolt), Chrome steel (Ball), Ground ball race for precision
Thread: 1.37 x 24T (English), 35 x 1.0 (French), 36 x 24T (Italian)
B.B. width: 68 mm, 70 mm
Steel ball diameter: 1/4"
Weight:10.4 ozs. (295gms.)

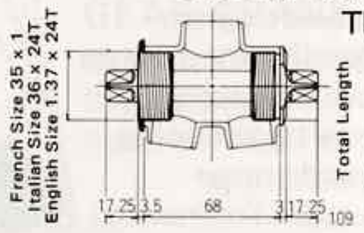

LOCK RING Model: HC-900
Specifications

Type	Weight
For 12T	0.7 ozs. (21 gms.)
For 13T–17T	0.5 ozs. (15 gms.)

Use: Track hub only
Material: Steel
Thread: 1.29" x 24TL (English)

RACING SPROCKET
Model: HC-500
Specifications

Sprocket	Weight
13T	0.4 ozs. (12 gms.)

Use: Track hub only
Material: Ultra duralumin with anodized finish
Chain: 1/2" x 1/8"
Thread: 1.37" x 24T (English)

FORK ENDS
Model:
EP-130,
EP-140

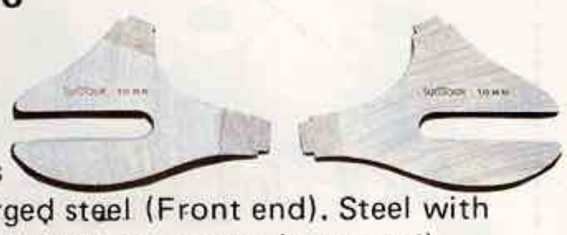

Specifications
Material: Forged steel (Front end). Steel with fine blanking process (Rear end)
Type: Track type
Thickness:Front1/4"(6mm) Rear3/16"(5 mm)
Hub Axle diameter:
EP-130 Front11/32"(9mm),Rear13/32"(10mm)
EP-140 Front9/32"(8mm),Rear11/32"(9mm)
Weight: EP-130 7.60 ozs. (215 gms.)
EP-140 7.9 ozs. (233 gms.)

PEDALS Model: PL-3000
Specifications
Material: Forged light alloy (Body) with anodized finish, Light alloy (Plate) with anodized finish. Light alloy die-cast (Dust cap) with anodized finish. Cr-Mo(Spindle) with allen key hole (6 mm). Ground ball race for precision
Type: Track type
Width: 2-3/8" (61 mm)
Thread:9/16"x 20T(English) 14 x1.25(French)
Steel ball diameter: 5/32"
Weight: 11.8 ozs. (335 gms.) Pair

SPRINT

ROAD HUB
Model: BH-2000
Specifications
Material:Forged light alloy(Body) Steel (Axle)
Mechanism: Sealed bearing
Double Sealed mechanism
Dished & Slant cut flange
Type: Small flange/Quick release
Locknut-to-locknut dimension: Front 100 mm
Rear 120 mm, 126 mm
Spoke drilling: 28H, 32H, 36H
Thread: BC 1.37" x 24T
Weight: 18.9 ozs. (536 gms.) pair 100-126 mm

TRACK HUB
Model:RH-4400
Specifications
Material:
Forged light alloy (Body)/Anodized finish
Steel (Axle)
Type: Large flange/Double thread
Locknut-to-locknut dimension: Front 100 mm, Rear 120 mm
Spoke drilling: 20H, 24H, 28H, 32H, 36H
Sprocket thread: 1.37" x 24T
Lock ring thread: 1.29" x 24TL
Axle nut thread: Front M9 x 1, Rear M10 x 1
Fork end Clearance: Front 9 mm, Rear 10 mm
Weight: 18.9 ozs. (535 gms.) Pair

HEAD SET
Model: HS-300
Specifications
Material: Steel (Body) with chromium plating. Light alloy (Acorn nut) with anodized finish. Chrome steel (Ball) Ground ball race for precision
Type: Track type
Thread: 1" x 24T (English), 25 x 1.0 (French)
Other: Italian size
Steel ball diameter: 5/32"
Weight: 5.1 Ozs. (145 gms.)

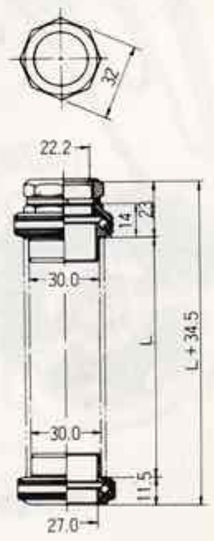

SUPERBE TECH

REAR DERAILUER -S
Model:RD-4700

Specifications
Material:
Light alloy
(Body, Cage)
Rear largest sprocket:
Below 26T
(With Superbe rear end)
Total gear capacity: 28T
(In case of front teeth
difference below 16T)
Mechanism: Parallelogram
Sealed Mechanism
Direct Pull
Top Normal
Weight: 7.1 ozs. (201 gms.)

REAR DERAILLEUR -L
Model: RD-4800

Specifications
Material: Light alloy
(Body)
Steel (Cage)
Rear largest sprocket: Below 34T
(With Superbe rear end)
Total gear capacity: 34T
(In case of front teeth
difference below 14T)
Mechanism: Slant parallelogram,
Sealed mechanism, Direct pull,
Pulley self positioning, Quick cage, Top normal
Weight: 10.7 ozs. (302 gms.)

REAR DERAILLEUR -GTL
Model: RD-5400

Specifications
Material:
Light alloy (Body)
Steel (Cage)/Search light finish
Rear largest sprocket:
Below 34T
(With Superbe rear end)
Total gear capacity: 40T (In case of
front teeth difference below 20T)
Mechanism: Slant parallelogram
Sealed mechanism
Direct pull
Pulley self positioning
Super wide range
Quick cage
Top normal
Weight: 10.8 ozs. (307 gms.)

MOUNTECH

REAR DERAILLEUR
Model: RD-4900

Specifications
Material:
Light alloy (Body)
Steel (Cage)/
Search light finish
Rear largest sprocket:
Below 34T
(With Superbe rear end)
Total gear capacity: 34T (In case of
front teeth difference below 14T)
Mechanism: Slant parallelogram,
Non-bending mechanism,
Easy cable threading,
Pulley self positioning,
Quick cage, Top normal
Weight: 9.8 ozs. (277 gms.)

REAR DERAILLEUR -GTL
Model: RD-5500

Specification
Material:
Light alloy (Body)
Steel (Cage)/
Search light finish
Rear largest sprocket: Below 34T
(With Superbe rear end)
Total gear capacity: 40T (In case of
front teeth difference below 20T)
Mechanism: Slant parallelogram
Non-bending mechanism
Easy cable treading
Pulley self positioning
Super wide range
Quick cage Top normal
Weight: 10.0 ozs. (283 gms.)

FRONT DERAILLEUR
Model: FD-2700

Specifications
Material:
Light alloy (Body, Outer cage)
Steel (Inner cage)/ Search light finish
Gear capacity: Below 26T
Mechanism:
Parallelogram Two-Way cable setting
Tail dodge guard Super wide range
Low normal
Clamp diameter: 28.6 mm (1-1/8")
Minimum difference of sprockets: 6T
Weight: 3.6 ozs. (102 gms.)

ALPINE GEAR TECH

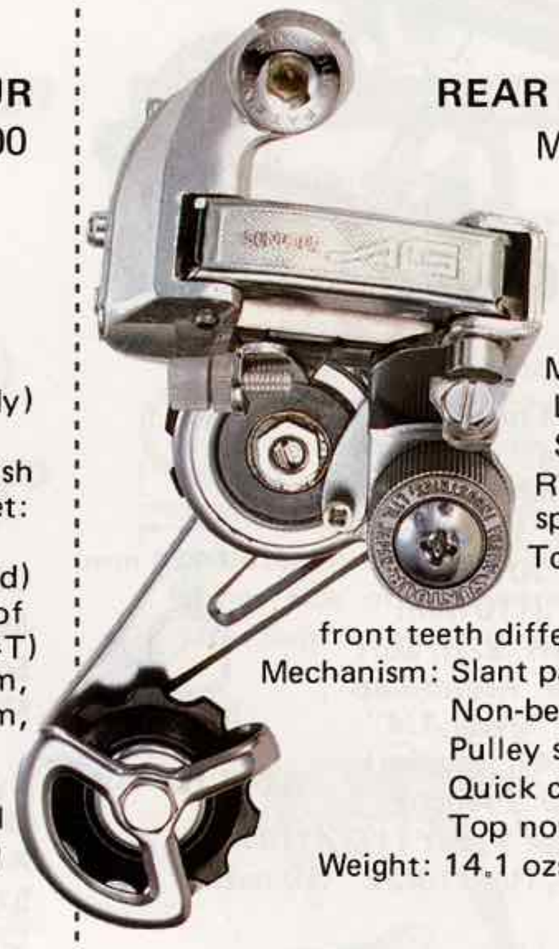

REAR DERAILLEUR
Model: RD-5000

Specifications
Material:
Light alloy (Body)
Steel (Cage)
Rear largest
sprocket: Below 38T
Total gear capacity:
34T (In case of
front teeth difference below 10T)
Mechanism: Slant parallelogram,
Non-bending mechanism,
Pulley self positioning,
Quick cage,
Top normal
Weight: 14.1 ozs. (399 gms.)

REAR DERAILLEUR GTL
Model: RD-5600

Specifications
Material:
Light alloy (Frame)
Steel (Shifter, Cage)
Rear largest sprocket:
Below 38T
(With Superbe rear end)
Total gear capacity: 40T
(In case of front teeth
difference below 20T)
Mechanism: Slant parallelogram
Non-bending mechanism
Pulley self positioning
Super wide range
Quick cage Top normal
Weight: 12.9 ozs. (366 gms.)

FRONT DERAILLEUR
Model: FD-2800

Specifications
Material: Light alloy (Body)
Steel (Cage)/Chromium finish
Gear capacity: Below 26T
Mechanism:
Parallelogram Two-Way cable setting
Tail dodge guard Super wide range
Low normal
Clamp diameter: 28.6 mm (1-1/8")
Minimum difference of sprockets: 6T
Weight: 4.5 ozs. (128 gms.)

CYCLONE MARK-II

REAR DERAILLEUR
Model: RD-3500

Specifications
Material:
Light alloy
(Body and cage)
Rear largest
sprocket: 26T
(With Superbe rear end)
Total gear capacity: 28T
(In case of front teeth
difference below 15T)
Mechanism: Slant parallelogram,
Straight wire mechanism,
Easy cable setting, Top normal
Weight: 5.6 ozs. (160 gms.)

REAR DERAILLEUR
Model: RD-3700

Specifications
Material:
Light alloy
(Body and cage)
Rear largest
sprocket: 34T
(With Superbe rear end)
Total gear capacity: 34T
(In case of front teeth
difference below 13T)
Mechanism: Slant parallelogram,
Non-bending mechanism,
Easy cable setting,
Quick cage, Top normal
Weight: 6.0 ozs. (170 gms.)

FRONT DERAILLEUR
Model: FD-2300

Specifications
Material: Light alloy (Body)
Steel (Cage)/
Heat treatment and chromium
plating
Stainless steel (Clamp band)
Gear capacity: 18T
Mechanism: Parallelogram, Endless clamp,
Bare cable system, Low normal
Clamp diameter: 1-1/8" (28.6mm)
for round tube
Weight: 3.3 ozs. (94 gms.)

FRONT DERAILLEUR
Model:FD-2400

Specifications
Material:
Forged light alloy(Body)/anodized fish,
Steel (Cage)
Heat treatment and chromium plating.
Gear capacity: 18T or less
Mechanism: Parallelogram, Detachable
cable casing stop, Low normal
Clamp diameter: 1-1/8" (28.6")
Weight: 3.6 ozs. (95 gms.) without cable stop

TOP-MOUNT

SHIFT LEVER
Model: LD-2300
Specifications
Material: Light alloy (Body, Lever)/
buffed or barrel finish
Stainless steel (Clamp band)
Mechanism: Self adjust, Synchro shift,
Top mounting, Interval travel stop
Type: Double lever, Endless clamp
Mounting position: Down tube
Clamp diameter: 1-1/8" (28.6 mm)
Weight: 2.6 ozs. (73 gms.)
Other: Different sets available for Top Normal
or Low Normal front derailleurs.

SHIFT LEVER
Model: LD-2350
Specifications
Material: Light alloy (Body, Cage)/
buffed or barrel finish
Mechanism: Self adjust, Synchro shirt,
Top mounting, Interval travel stop
Type: Double lever
Mounting method: Brazed on
Mounting position: Down tube
Weight: 2.4 ozs. (68 gms.)
Other: Different sets available for Top Normal
or Low normal front derailleurs.
Down tube diameter: 1-1/8" (28.6 mm)

SEALED BEARING HUBS

SEALED BEARING HUB
Model: BH-4600

Specifications
Material: Light alloy (Body)
Steel (Axle)
Mechanism: Sealed bearing
Double sealed mechanism
Type: Quick release type
Small flange
Locknut-to-locknut dimension:
Front 96 mm, 100 mm,
Rear 120 mm, 124 mm, 126 mm
Spoke drilling: 32H, 36H
Thread: 1.37" x 24T (English)
Weight: 22.0 ozs. (622 gms.) Pair

SEALED BEARING HUB
Model: BH-4700

Specifications
Material: Light alloy (Body)
Steel (Axle)
Mechanism: Sealed bearing
Double sealed mechanism
Type: Quick release type
Large flange
Locknut-to-locknut dimension:
Front 96 mm, 100 mm
Rear 120 mm, 124 mm, 126 mm
Spoke drilling: 36H
Thread: 1.37" x 24T (English)
Weight: 23.0 ozs. (647 gms.) Pair

BL

REAR DERAILLEUR
Model: RD-3200

Specifications
Material: Light alloy (Body, Cage)
Rear largest sprocket: 24T (With Superbe rear end)
Total gear capacity: 24T (In case of front teeth difference below 14T)
Mechanism: Slant parallelogram, Non-bending mechanism, Top normal
Weight: 7.3 ozs. (208 gms.)

FRONT DERAILLEUR
Model: FD-1900

Specifications
Material: Light alloy (Body, Outer cage), Steel (Inner cage)/Heat treatment, Dull finish
Gear capacity: 18T
Mechanism: Slant parallelogram, 2-way cable setting, Low normal
Clamp diameter: 1-1/8" (28.6 mm)
Weight: 3.3 ozs. (93 gms.) without cable stop

REAR DERAILLEUR (S)
Model: RD-3600

Specifications
Material: Light alloy (Body, Cage)
Rear largest sprocket: 26T (With Superbe rear end)
Total gear capacity: 30T (In case of front teeth difference below 18T)
Mechanism: Slant parallelogram, Non-bending mechanism, Quick cage, Top normal
Weight: 7.9 ozs. (225 gms.)

SHIFT LEVER
Model: LD-2200

Specifications
Material: Light alloy (Lever), Steel (Clamp)
Type: Universal type/ Double lever
Clamp diameter: 1-1/8" (28.6 mm)
Mounting position: Down tube
Weight: 2.4 ozs. (68 gms.)

SHIFT LEVER
Model: LD-3300

Specifications
Material: Light alloy (Lever) Steel (Clamp)
Type: Universal type/ Double lever
Clamp diameter: 1-1/8" (28.6 mm)
Mounting position: Down tube
Weight: 2.7 ozs. (76 gms.)

REAR DERAILLEUR(GT)
Model: RD-3300

Specifications
Material: Light alloy (Body, Cage)
Rear largest sprocket: 34T (With Superbe rear end)
Total gear capacity: 34T (In case of front teeth difference below 14T)
Mechanism: Slant parallelogram, Non-bending mechanism, Quick cage, Top normal
Weight: 7.8 ozs. (220 gms.)

SHIFT LEVER
Model: LD-3350

Specifications
Material: Light alloy (Lever)
Type: Universal type/Double lever
Down tube diameter: 1-1/8" (28.6 mm)
Mounting method: Brazed on
Mounting position: Down tube
Weight: 2.3 ozs. (65 gms.)

ARX

REAR DERAILLEUR
Model: RD-4300

Specifications
Material: Light alloy (Body)/ Barrel finish Steel (Cage)/Dull finish
Rear largest sprocket: 26T (With Superbe rear end)
Total gear capacity: 28T (In case of front teeth difference below 15T)
Mechanism: Slant parallelogram, Non-bending mechanism, Easy cable setting, Top normal
Weight: 7.3 ozs. (206 gms.)

REAR DERAILLEUR
Model: RD-4500

Specifications
Material: Light alloy (Body)/Barrel finish Steel (Cage)/Dull finish
Rear largest sprocket: 32T (With Superbe rear end)
Total gear capacity: 32T (In case of front teeth difference below 14T)
Mechanism: Slant parallelogram, Non-bending mechanism Easy cable setting Top normal
Weight: 9.9 ozs. (280 gms.)

FRONT DERAILLEUR
Model: FD-2600

Specifications
Material: Light alloy (Body, Outer cage) Steel (Inner cage)/Heat treatment, dull finish
Gear capacity: 18T
Mechanism: Parallelogram, 2-way setting, Low normal
Clamp diameter: 1-1/8" (28.6 mm)
Weight: 3.3 ozs. (93 gms.) without cable stop

Vx

REAR DERAILLEUR
Model: RD-2200

Specifications
Material:
Light alloy (Body)/
Die-cast pressed
Rear largest sprocket: 26T
(With Superbe rear end)
Total gear capacity: 24T
(In case of front teeth
difference below 12T)
Mechanism: Slant parallelogram,
Non-bending mechanism,
Total normal
Weight: 7.1 ozs. (200 gms.)

FRONT DERAILLEUR
Model: FD-1600
Specifications
Material: Light alloy (Body)
Steel (Cage)/ Dull finish.
Gear capacity: 18T
Mechanism: Parallelogram,
Low normal.
Clamp diameter: 1-1/8"
(28.6 mm)
Weight: 4.0 ozs. (114 gms. Bare cable type)
Other: Different sets available for outer
housing type or Bare cable type

HUBS
Model: RH-1500
Specifications
Material: Forged light alloy
Type: Quick release/Small flange
Locknut-to-locknut dimension:
Front: 100 mm
Rear: 120, 124, 126 mm
Spoke drilling: 36H
Thread: 1.37" x 24T (English)
Weight: 21.0 ozs. (595 gms.) Pair

REAR DERAILLEUR (S)
Model: RD-2500

Specifications
Material: Light alloy
(Body)/
Die-cast pressed
Rear largest sprocket:
26T
(With Superbe rear end)
Total gear capacity: 27T
(In case of front teeth
difference below 15T)
Mechanism: Slant parallelogram,
Non-bending mechanism,
Quick cage,
Top normal
Weight: 7.4 ozs. (210 gms.)

SHIFT LEVER
Model: LD-1900
Specifications
Material: Light alloy (Lever)
Stainless steel (Clamp)
Type: Universal type/Double lever
Clamp diameter: 1-1/8" (28.6 mm)
Mounting position: Down tube
Weight: 2.8 ozs. (80 gms.)

HUBS
Model: RH-2500
Specifications
Material: Forged light alloy
Type: Quick release/Large flange
Locknut-to-locknut dimension:
Front: 100 mm
Rear: 120, 124, 126 mm
Spoke drilling: 36H
Thread: 1.37" x 24T (English)
Weight: 22.6 ozs. (640 gms.) Pair

REAR DERAILLEUR
Model: RD-2400

Specifications
Material: Light alloy
(Body)/Die-cast pressed
Rear largest sprocket: 34T
(With Superbe rear end)
Total gear capacity: 34T
(In case of front teeth
difference below 14T)
Mechanism: Slant parallelogram,
Straight wire mechanism,
Quick cage,
Top normal
Weight: 7.4 ozs. (210 gms.)

SHIFT LEVER
Model: LD-1950
Specifications
Material: Light alloy (Lever)
Type: Universal type/Double lever
Brazed on type
Down tube diameter: 1-1/8"
(28.6 mm)
Mounting position: Down tube
Weight: 2.4 ozs. (68 gms.)

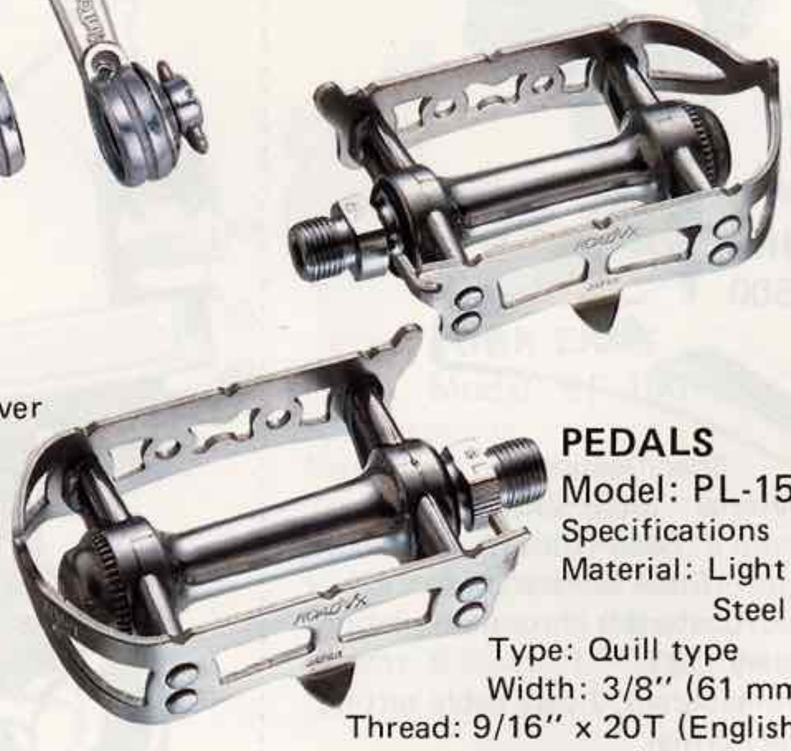

PEDALS
Model: PL-1500
Specifications
Material: Light alloy (Body),
Steel (Axle).
Type: Quill type
Width: 3/8" (61 mm)
Thread: 9/16" x 20T (English)
14 x 1.25 (French)
Weight: 12.7 ozs. (360 gms.) Pair

REAR DERAILLEUR

REAR DERAILLEUR
Model: RD-4200

Specifications
Material:
Light alloy (Body)/
Barrel finish,
Steel(Shifter, Cage)/
Lusterless chromium plating
Rear largest sprocket: 26T
(With Superbe rear end)
Total gear capacity: 28T
(In case of front teeth difference below 16T)
Mechanism: Slant parallelogram
Non-bending mechanism
Easy cable setting
Top normal
Weight: 9.9 ozs. (280 gms)

SEVEN
Model: RD-1900

Specifications
Material:
Light alloy (Frame)/Die-cast,
Steel/
Chromium plating.
Rear largest sprocket: 26T
(With Superbe rear end)
Total gear capacity: 26T
(In case of front teeth difference below 14T)
Mechanism: Slant parallelogram,
Non bending mechanism,
Quick cage,
Top normal
Weight: 11.0 ozs. (313 gms.)

GT
Model: RD-1200

Specifications
Material: Steel/
Chromium plating
Rear largest sprocket: 34T
(With Superbe rear end)
Total gear capacity: 36T
(In case of front teeth difference below 16T)
Mechanism: Slant parallelogram,
Non-bending mechanism,
Quick cage,
Top normal
Weight: 15.5 ozs. (440 gms.)

REAR DERAILLEUR
Model: RD-4400

Specifications
Material:
Light alloy(Body)/
Barrel finish
Steel (Shifter, Cage)/
Lusterless chromium plating
Rear largest:sprocket: 34T
(With Superbe rear end)
Total gear capacity: 34T
(In case of front teeth difference below 14T)
Mechanism: Slant parallelogram
Non-bending mechanism
Easy cable setting.
Top normal, Quick cage
Weight: 10.7 ozs. (303 grms.)

SEVEN GT
Model: RD-2000

Specifications
Material:
Light alloy (Frame)/
Die-cast,
Steel/Chromium plating
Rear largest sprocket: 34T
(With Superbe rear end)
Total gear capacity: 32T
(In case of front teeth difference below 12T)
Mechanism: Slant parallelogram,
Non-bending mechanism
Quick cage, Top normal
Weight: 12.1 ozs. (343 gms.)

VOLANTE
Model: RD-2600

Specifications
Material:
Light alloy (Frame),
Steel/
Chromium plating
Rear largest sprocket: 24T
(With Suberbe rear end)
Total gear capacity: 21T
(In case of front teeth difference below 11T)
Mechanism:
Slant parallelogram,
Non-bending mechanism,
Top normal
Weight: 9.3 ozs. (263 gms.)

FRONT DERAILLEUR
Model: FD-2500

Specifications
Material: Light alloy (Body)/
Barrel finish,
Steel (Shifter, Cage)/
Lusterless chromium plating
Gear capacity: 18T
Mechanism: Parallelogram, 2-way cable setting,
Low normal
Clamp diameter: 1-1/8" (28.6 mm)
Weight: 3.9 ozs. (112 gms.)

HONOR
Model: RD-1100

Specifications
Material:
Steel/Chromium plating
Rear largest sprocket: 30T
Total gear capacity: 28T
(In case of front teeth difference below 12T)
Mechanism:
Slant parallelogram,
Non-bending mechanism,
Quick cage,
Top normal
Weight: 14.1 ozs.
(400 gms.)

FRONT DERAILLEUR

NSL
Model: FD-1700
Specifications
Material: Light alloy (Frame)/Die-cast Light alloy (Outer cage)/ Heat treatment, Steel (Inner chain guide), Chromium plating
Gear capacity: 16T
Mechanism: Slant parallelogram, Drawbridge system, Top normal
Clamp diameter: 1-1/8" (28.6 mm)
Weight: 3.9 ozs. (110 gms.)

SEVEN
Model: FD-1400
Specifications
Material: Light alloy (Frame)/Die-cast, Steel (Cage)/Chromium plating
Gear capacity: 18T
Mechanism: Parallelogram, Low normal
Clamp dimeter: 1-1/8" (28.6 mm)
Weight: 4.0 ozs. (113 gms., Bare cable type)
Others: Different set available for Outer housing type or Bare cable type

COMPE-V
Model: FD-1100
Specifications
Material: Light alloy (Frame)/Die-cast, Steel (Cage)/Chromium plating
Gear capacity: 18T
Mechanism: Slant parallelogram, Top normal
Clamp diameter: 1-1/8" (28.6 mm)
Weight: 4.7 ozs. (134 gms.)

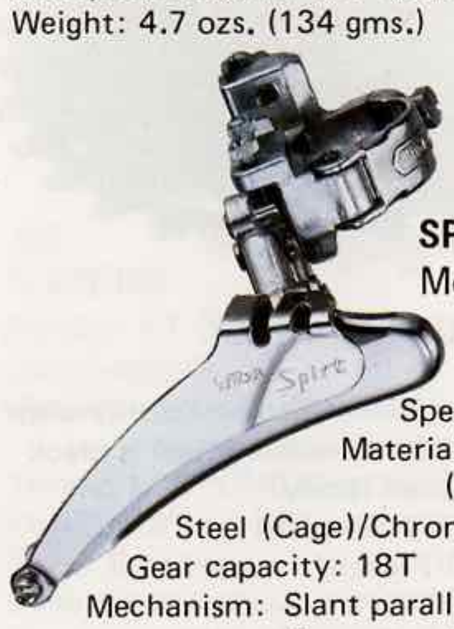

SPIRT
Model: FD-1000
Specifications
Material: Light alloy (Frame)/Die-cast, Steel (Cage)/Chromium plating
Gear capacity: 18T
Mechanism: Slant parallelogram, Top normal
Clamp diameter: 1-1/8" (28.6 mm)
Weight: 5.1 ozs. (145 gms.)

SHIFT LEVER

BAR-CON
Model: LD-1400
Specifications
Material: Light alloy/ Die-cast
Mechanism: Power lever with ratchet
Mounting position: Handle bar end
Weight: 6.2 ozs. (176 gms.) Pair

PUB-10
Model: LD-1300
Specifications
Material: Light alloy (Lever), Steel (Clamp)
Mechanism: Power lever with ratchet
Type: Double lever
Clamp diameter: 7/8" (22.2 mm)
Mounting position: Handle bar stem
Weight: 8.0 ozs. (227 gms.)

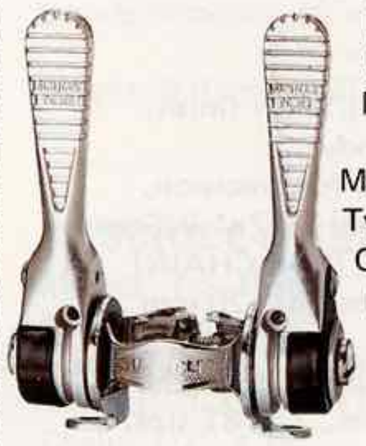

PDL-M
Model: LD-1500
Specifications
Material: Light alloy (Lever), Steel (Clamp)
Mechanism: Power lever with ratchet
Type: Double lever
Clamp diameter: 1-1/8" (28.6 mm)
Mounting position: Down tube
Weight: 4.4 ozs. (125 gms.)
Other: Brazed on type is available.

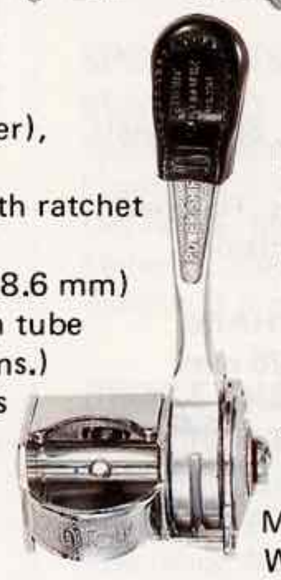

PUB-5
Model: LS-1300
Specifications
Material: Light alloy (Lever), Steel (Clamp)
Mechanism: Power lever with ratchet
Type: Single lever
Clamp diameter: 7/8" (22.2 mm)
Mounting position: Handle bar stem
Weight: 5.5 ozs. (156 gms.)

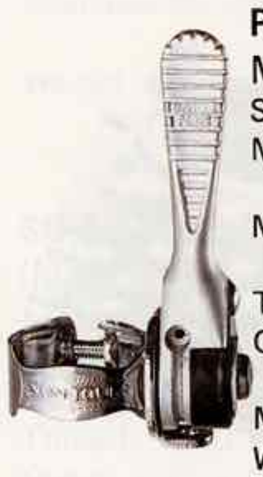

PSL-M
Model: LS-1500
Specifications
Material: Light alloy (Lever), Steel (Clamp).
Mechanism: Power lever with ratchet
Type: Single lever
Clamp diameter: 1-1/8" (28.6 mm)
Mounting position: Down tube
Weight: 2.5 ozs. (72 gms.)
Other: Brazed on type is available.

UBN-10
Model: LD-3000
Specifications
Material: Light alloy (Lever) Steel (Clamp)
Type: Universal type/ Double lever
Clamp diameter: 7/8" (22.2 mm)
Mounting position: Handle bar stem
Weight: 5.0 ozs. (142 gms.)

DLW
Model: LD-2900
Specification
Material: Light alloy (Lever) Steel (Clamp)
Type: Universal type/ Double lever
Clamp diameter: 1-1/8" (28.6 mm)
Mounting position: Down tube
Weight: 2.9 ozs. (83 gms.)

UBN-5
Model: LS-3500
Specifications
Material: Light alloy (Lever) Steel (Clamp)
Type: Universal type/Single lever
Clamp diameter: 7/8" (22.2 mm)
Mounting position: Handle bar stem
Wight: 3.7 ozs. (104 gms.)

DLW
Model: LD-2950
Specification
Material: Light alloy (Lever)
Type: Universal type/ Double lever
Down tube diameter: 1-1/8" (28.6 mm)
Mounting method: Brazed on
Mounting position: Down tube
Weight: 2.5 ozs. (72 gms.)

MIGHTY SHIFTER II
Model: LS-2200
Specifications
Material: Light alloy (Lever), Stainless (Clamp)
Mechanism: Power lever with ratchet
Clamp diameter: 7/8" (22.2 mm)
Mounting position: Handle bar
Weight: 3.4 ozs. (95 gms.)

SLW
Model: LS-1000
Specifications
Material: Light alloy (Lever), Steel (Clamp)
Type: Universal type/Single lever
Clamp diameter: 1-1/8" (28.6 mm)
Mounting position: Down tube
Weight: 2.0 ozs. (56 gms.)
Other: Brazed-on type is available.

MSM
Model: LD-3500 (Set)
LS-4100 (For Right)
LS-4300 (For Left)
Specifications
Material: Light alloy (Lever) Stainless (Clamp)
Mechanism: Power lever with rachet
Clamp diameter: 7/8" (22.2 mm)
Mounting position: Handle bar
Weight: 7.2 ozs. (205 gms.) pair

FREEWHEEL

MICRO LITE
7-SPEED (ULTRA TYPE)
Model: LF-7000
Specification
Material: Super Duralumin (Body, Sprockets)/
Anodized finish
Cr-Mo (Ground ball races, Ratchet)
Ground ball race for Precision
Thread: 1.37 x 24T (English)
Chain: 1/2" x 3/32" (ULTRA-6 CHAIN)
Locknut to locknut dimension: 126 mm
Adjusting Mechanism: Double-locknut system
Weight: 6.0 ozs. (165 gms., 12-18T size)

NEW WINNER
6-SPEED (ULTRA TYPE)
Model: NW-6500
Specifications
Material: Steel (Sprockets)/Silver finish,
Forged steel (Body),
Ground ball race for precision.
Thread: 1.37"x24T(English) 34.7x1.0(French)
Chain: 1/2" x 3/32" (ULTRA-6 CHAIN)
Locknut-to-locknut dimension: 120 mm
Type: Boss type
Body adjustment mechanism: Double nut
Weight: 11.9 ozs. (338 gms., 13-18T size)

PERFECT TYPE
ULTRA-6
Model: US-6500 (ULTRA TYPE)
Specifications
Material: Steel (Sprockets)/Silver finish,
Forged steel (Body),
Ground ball race for precision.
Thread: 1.37"x24T(English), 34.7x1.0(French)
Chain: 1/2" x 3/32"
Locknut-to-locknut dimension: 120 mm
Type: Boss type
Weight: 13.8 ozs. (391 gms., 14-19T size)

MICRO LITE
6-SPEED (ULTRA TYPE)
Model: LF-6000
Specification
Material: Super Duralumin (Body, Sprockets)/
Anodized finish
Cr-Mo (Ground ball races, Ratchet)
Ground ball race for Precision
Thread: 1.37 x 24T (English)
Chain: 1/2" x 3/32" (ULTRA-6 CHAIN)
Locknut to locknut dimension: 120 mm
Adjusting Mechanism: Double-locknut system
Weight: 5.4 ozs. (154 gms., 13-18T size)

NEW WINNER
6-SPEED
Model: NW-6000
Specifications
Material: Steel (Sprockets)/Silver finish,
Forged steel (Body),
Ground ball race for precision.
Thread: 1.37"x24T(English) 34.7x1.0(French)
Chain: 1/2" x 3/32"
Locknut-to-locknut dimension: 126 mm
Type: Boss type
Body adjustment mechanism: Double nut
Weight: 13.0 ozs. (368 gms., 13-18T size)

PERFECT
6-SPEED
Model: PN-6000
Specifications
Material: Steel (Sprockets)/Brown finish,
Forged steel (Body)
Thread: 1.37"x24T(English) 34.7x1.0(French)
Chain: 1/2" x 3/32"
Locknut-to-locknut dimension: 124mm
Type: Boss type
Weight: 15.7 ozs. (446 gms., 14-24T size)

NEW WINNER
7-SPEED (ULTRA TYPE)
Model: NW-7000
Specifications
Material: Steel (Sprockets)/Silver finish,
Forged steel (Body),
Ground ball race for precision.
Thread: 1.37"x24T(English) 34.7x1.0(French)
Chain: 1/2" x 3/32" (ULTRA-6 CHAIN)
Locknut-to-locknut dimension: 126 mm
Type: Boss type
Body adjustment mechanism: Double nut
Weight: 12.9 ozs. (366 gms., 12-18T size)

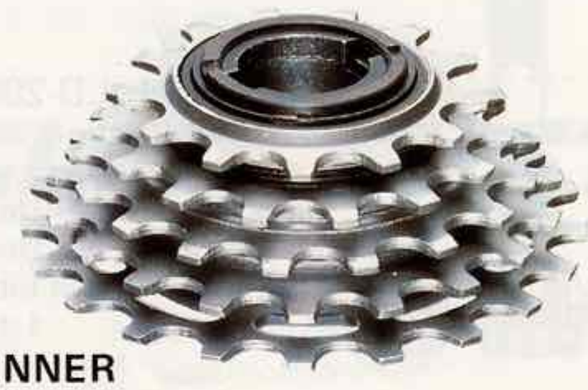

NEW WINNER
5-SPEED
Model: NW-5000
Specifications
Material: Steel (Sprockets)/Silver finish,
Forged steel (Body),
Ground ball race for precision.
Thread: 1.37"x24T(English) 34.7x1.0(French)
Chain: 1/2" x 3/32"
Locknut-to-locknut dimension: 120 mm
Type: Boss type
Body adjustment mechanism: Double nut
Weight: 10.4 ozs. (294 gms., 13-17T size)

PERFECT
6-SPEED
Model: PS-6000
Specifications
Material: Steel(Sprockets)/Brown finish, except
the smallest sprocket which is black
Forged steel (Body)
Thread: 1.37" x 24T (English)
34.7x1.0(French)
Chain: 1/2" x 3/32"
Locknut-to-locknut dimension: 126 mm
Type: Boss type
Weight: 15.2 ozs. (430 gms., 13-22T size)

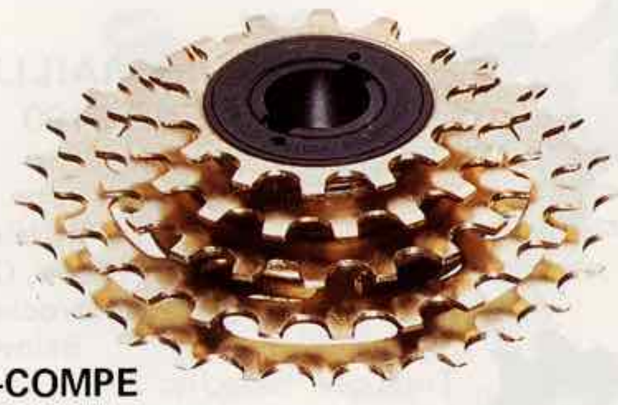

PRO-COMPE 5-SPEED
Model: PC-5000

Material: Steel (Sprockets)/ Gold finish,
Forged steel (Body),
Ground ball race for precision.
Thread: 1.37"x24T(English) 34.7x1.0(French)
Chain: 1/2" x 3/32"
Locknut-to-locknut dimension: 120 mm
Type: Boss type
Weight: 11.8 ozs. (335 gms., 14-18T size)

PERFECT 5-SPEED
Model: PT-5000
Specifications
Material: Steel (Sprockets)/Brown finish
Forged steel (Body)
Thread: 1.37"x24T(English) 34.7x1.0(French)
Chain: 1/2" x 3/32"
Locknut-to-locknut dimension: 120 mm
Type: Boss type
Weight: 11.8 ozs. (335 gms., 14-18T size)

AG 5-SPEED
Model: PT-3800
Specifications:
Material: Steel (Sprockets)/Brown finish
Forged steel (Body)
Thread: 1.37"x24T(English) 34.7x1.0(French)
Chain: 1/2" x 3/32"
Type: Boss type
Locknut-to-locknut dimension: 124 mm
Standard model: 14 x 17 x 22 x 28 x 38T
Weight: 20.5 ozs. (580 gms., 14-38T size)
Other: With chain guard

SD 3-SPEED
Model: FT-3050
Specifications
Material: Steel (Sprockets)/Brown finish
Forged steel (Body)
Thread: 1.37" 24T (English)
Chain: 1/2" x 1/8"
Standard model: 16 x 19 x 24T
16 x 19 x 22T
Weight: 9.9 ozs. (280 gms, 16 x 19 x 24T)

SD SINGLE-SPEED
Model: FS-1500
Specifications
Material: Steel/Brown finish
Thread: 1.37" x 24T (English)
Chain: 1/2" x 1/8"
Available sprockets: 16T, 18T, 19T, 20T, 21T, 22T, 24T
Weight: 6.5 ozs. (184 gms.) 18T

SC SINGLE-SPEED
(MINI SIZE)
Model: MF-1000
Specifications
Material: Steel/Brown finish
Thread: M30 x P1.0 (Metric)
Chain: 1/2" x 1/8"
Hub: Mini cycle hub
Sprocket: 14, 15T
Weight: 4.4 ozs. (124 gms.) 14T
Others: 5/32" Steel balls.

CHAIN

ULTRA-6 CHAIN
Model: UC-6000
Specifications
Material: Cr-Mo (Pin, Bush), Steel (Plate)
Surface treatment: Roller link plate/Black finish,
Pin link plate/Silver finish
Size: 1/2" x 3/32" (ULTRA-6 SIZE)

Z CHAIN
Model: TZ-6000
Specifications
Material: Steel
Surface treatment: Roller link plate/Black finish
Pin link plate/Brown finish
Size: 1/2" x 3/32"

SPOKE DISC

SPOKE DISC
Model: SD-750
Specifications
Size: 7-1/2" (190 mm)
for 27T – 34T
low gear
Material: Steel or light alloy
with anodized finish
Weight: Steel – 4.7 ozs. (132 gms.)
Light alloy – 1.7 ozs. (48 gms.)

SPOKE DISC
Model: SD-720
Specifications
Diameter: 7-1/4" (184 mm)
Use range: Maximum 38T
Material: Steel
Weight: 3.8 ozs. (109 gms.)

SPOKE DISC
Model: SD-650
Specifications
Diameter: 6-1/2" (165 mm)
Use range: Maximum 27T
Material: Steel or light alloy
with anodized finish
Weight: Steel 3.6 ozs. (103 gms.)
Light alloy 1.3 ozs. (37 gms.)

SPOKE DISC
Model: SD-600
Specifications
Diameter: 6" (150 mm)
Use range: Maximum 30T
Material: Steel or light alloy
Weight: Steel 2.4 ozs. (67 gms.)
Light alloy 0.8 ozs. (24 gms.)

SPOKE DISC
Model: SD-550
Specifications
Diameter: 5-1/2" (140 mm)
Use range: Maximum 30T
Material: Steel
Weight: 3.1 ozs. (89 gms.)

SPOKE DISC
Model: SD-450
Specifications
Diameter: 4-1/2" (120 mm)
Material: Steel or light alloy
Weight: Steel 1.6 ozs. (45 gms.)
Light alloy 0.7 ozs. (21 gms.)

SPOKE DISC
Model: SD-760
Specifications
Material: Plastic
Size: 186 mm (7-1/2")
Weight: 16.0 ozs.
(47 gms.)

Model: SD-660
Specifications
Size: 150 mm (6")
Material: Plastic
Weight: 33 gms.

TRIMEC

TRIMEC REAR DERAILLEUR
Model: RD-4600
Specifications
Material: Light alloy (Frame)
Steel (Body, Cage)
Largest rear sprocket: 28T (With GS rear end)
Total gear capacity: 28T (In case of front teeth difference below 14T)
Mechanism: Parallelogram
Twin Pivot derailleur cage Wire saver
Quick cage Top normal
Weight: 11.0 ozs. (310 gms.)

TRIMEC FRONT DERAILLEUR
Model: FD-2900
Specifications
Material: Light alloy (Body)
Steel (Cage)/Heat treatment and Chromium finish
Gear capacity: Below 18T
Mechanism: Parallelogran Cable guide option
Low normal
Clamp diameter: 1-1/8" (28.6 mm)
Weight: 4.0 ozs. (112 gms.)

CAP REAR DERAILLEUR
Model: RD-5100
Specifications
Material:
Light alloy (Frame)
Steel (Body, Cage)
Largest rear sprocket: Below 34T
Total gear capacity: 20T
Mechanism: Parallelogram
Wire saver Quick cage
Top normal
Weight: 10.9 ozs. (309 gms.)
With bracket

SHIFT LEVER
Model: LD-2700
Specifications
Material: Light alloy (Body, Lever)
Steel (Clamp band)
Mechanism:
Internal travel stops
Positive clicking
Type: Double lever
Use: For Trimec derailleur and freewheel only
Clamp diameter: 1-1/8" (28.6 mm)
Mounting position: Down tube
Weight: 2.9 ozs. (82 gms.)

SHIFT LEVER
Model: LD-3100
Specifications
Material: Light alloy (Body, Lever)
Steel (Clamp band)
Mechanism:
Internal travel stops
Positive clicking
Type: Double lever
Use: For Trimec derailleur and freewheel only
Clamp diameter: 7/8" (22.2 mm)
Mounting position: Handle bar stem
Weight: 4.3 ozs. (121 gms.)

TRIMEC FREEWHEEL 6-SPEED
Model: PT-6200
Specifications
Material: Steel (Sprocket)/Brown finish
Forged steel (Body)
Thread: 1.37" x 24T
Chain: 1/2" x 3/32"
Locknut-to-locknut dimension: 126 mm
Type: Boss type
Weight: 17.1 ozs. (485 gms., 14-26T size)

SHIFT LEVER
Model: LD-2750
Specifications
Material: Light alloy (Body, Lever)
Steel (Brazed-on stud)
Mechanism:
Internal travel stops
Positive clicking
Use: For Trimec derailleur and freewheel only
Type: Double lever
Mounting method: Brazed on
Mounting position: Down tube
Down tube diameter: 1-1/8" (28.6 mm)
Weight: 2.4 ozs. (68 gms. With Brazed-on stud)

SHIFT LEVER
Model: LS-3600
Specifications
Material: Light alloy (Body, Lever)
Steel (Clamp band)
Mechanism:
Internal travel stops
Positive clicking
Type: Single lever
Use: For Trimec derailleur and freewheel only
Clamp diameter: 7/8" (22.2 mm)
Mounting position: Handle bar stem
Weight: 3.6 ozs. (102 gms.)

CAP FREEWHEEL 6-SPEED
Model: PT-6100
Specifications
Material: Steel (Sprocket)/Brown finish
Forged steel (Body)
Thread: 1.37" x 24T
Chain: 1/2" x 3/32"
Locknut-to-locknut dimension: 126 mm
Type: Boss type
Weight: 16.8 ozs. (475 gms., 14-24T size)

MIGHTY CLICK SYSTEM

MIGHTY CLICK
Model: RD-2700
Specifications
Material: Light alloy (Frame)/ Die-cast Steel/Chromium plating
Rear largest sprocket: 30T (With Superbe rear end)
Total gear capacity: 16T
Mechanism: Slant Parallelogram, With wire saver, Quick cage, Top normal
Weight: 13.6 ozs. (389 gms.)

DLC
Model: LD-2400
Specifications
Material: Light alloy (Lever)
Steel (Clamp)
Mechanism: Click system
Type: Double lever
Use: For Mighty click rear derailleur only
Clamp diameter: 1-1/8" (28.6 mm)
Mounting position: Down tube
Weight: 5.1 ozs. (146 gms.)

UBD-10
Model: LD-2500
Specifications
Material: Light alloy (Lever)
Steel (Clamp)
Mechanism: Click system
Type: Double lever
Use: For Mighty click rear derailleur only
Clamp diameter: 7/8" (22.2 mm)
Mounting position: Handle bar stem
Weight: 6.3 ozs. (180 grms.)

DIRT COMPONENTS ENSEMBLE

XC-II PEDAL
Model: PL-5100
Specifications
Material: Light alloy (Body, Plate)
Cr-Mo (Axle)
Mechanism: Double sealed
Type: BMX, Touring
Oval plate
Width: 92 mm
Thread: 9/16" x 20T
1/2" x 20T
Weight: 15.4 ozs. (435 gms.) Pair

SEAT POST BINDER
Model: QR-170
Specifications
Material: Light alloy (Adjusting nut, Washer)/
Anodized finish
Steel (Lever handle, Housing)/
Chromium finish
Thread: M6 x 1
Useful shank length: 18-38.5 mm
Weight: 2.5 ozs. (72 gms.)

NEW WINNER (D-Type)
Model: NW-5100
Specifications
Material: Steel (Sprocket)/Silver finish
Forged steel (Body)
Ground ball race for precision
Dacro finish
Thread: 1.37" x 24T (English)
Chain: 1/2" x 3/32"
Hub dimension: Over 31 mm (Dimension from the out side edge of hub flange to the outside edge of thread of hub.)
Type: Boss type
Body adjustment mechanism:
Double nut micro adjustment
Sprocket: 1st-13, 14, 15T
2nd-14, 15, 16, 17, 18, 19T
3rd-15, 16, 17, 18, 19, 20, 21T
4-5th-16, 17, 18, 19, 20, 21, 22 23, 24, 25, 26, 28, 30, 32T
Weight: 10.4 ozs. (294 gms., 13-17T size)

SEALED BEARING HUB
Model: BH-1400
Specifications
Material: Light alloy (Body)
Steel (Axle)
Type: Nut type/Small flange
Locknut-to-Locknut dimension:
100 mm (Front)
126 mm, 130 mm (Rear)
Spoke drilling: 36H
Thread: 1.37" x 24T (English)
Mechanism: Sealed bearing
Double sealed
Weight: 20.0 ozs. (565 gms.) Pair

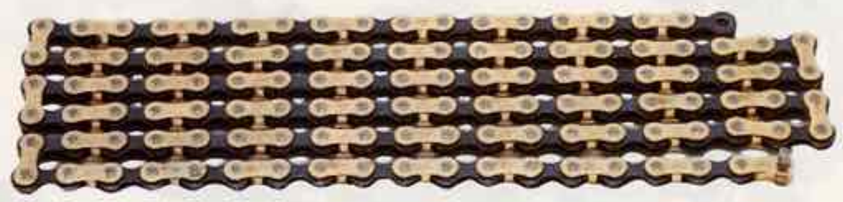

Z CHAIN
Model: TZ-6000
Specifications
Material: Steel (Plate), Cr-Mo (Pin)
Surface finish: Black/Roller ring plate
Gold/Pin link plate
Outer width of pin: 7.5 mm
Size: 1/2" x 3/32"
Weight: 12.9 ozs. (365 gms.)

NEW POWER THUMB SHIFTER
Model: LD-2800 (Set)
LS-3700 (For Right)
LS-3800 (For Left)
Specifications
Material: Light alloy (Lever)
Stainless steel (Clamp)
Mechanism: Power lever with Rachet
Clamp diameter: 22.2 mm (7/8")
Mounting position: Handle bar
Weight: 5.5 ozs. (155 gms.) Pair
Others: Available in both for right and left hand

FORK ENDS
Model: EF-190
Specifications
Material: Forged steel
Type: Straight drop out
Thickness: 6 mm (Front), 8 mm (Rear)
Hub axle diameter: 9 mm (Front),
10 mm (Rear)
Weight: 6.5 ozs. (184 gms.) Pair

SEALED BOTTOM BRACKET

SEALED BOTTOM BRACKET
Model: SA-100, SA-110, SA-120, SA-130, SA-140, SA-160

SS-100, SS-110, SS-120, SS-130, SS-140, SS-160, SS-150

Specifications
Mechanism: Double sealed
Chain line adjust mechanism
Other: French size, Italian size

Model	Taper size	Type	Material	Thread	Hanger width	Chain line	Weight
SA-100	Superbe	Track	Light alloy (Bearing cup, Lock ring, Sleeve) Cr-Mo (Axle)	1.37"x24T	68~70mm	42mm	9.7ozs.(275gms.)
SA-110	Superbe	Road (Double)		1.37"x24T	68~70mm	43.5mm	9.9ozs.(280gms.)
SA-120	Superbe	Road (Triple)		1.37"x24T	68~70mm	45mm	9.9ozs.(280gms.)
SA-130	Superbe	BMX		1.37"x24T	68~70mm	41.75mm	10.4ozs.(295gms.)
SA-140	Vx	BMX		1.37"x24T	68~70mm	41.75mm	10.7ozs.(304 gms.)
SA-160	Vx	Road (Triple)		1.37"x24T	68~70mm	43~45mm	10.4ozs.(295mgs.)
SS-100	Superbe	Track	Cr-Mo (Axle)	1.37"x24T	68~70mm	42mm	12.5ozs.(355gms.)
SS-110	Superbe	Road (Double)		1.37"x24T	68~70mm	43.5mm	12.9ozs.(365gms.)
SS-120	Superbe	Road (Triple)		1.37"x24T	68~70mm	45mm	13.0ozs.(368gms.)
SS-130	Superbe	BMX		1.37"x24T	68~70mm	41.75mm	13.4ozs.(379gms.)
SS-140	Vx	BMX		1.37"x24T	68~70mm	41.75mm	13.5ozs.(384gms.)
SS-160	Vx	Road (Triple)		1.37"x24T	68~70mm	43~45mm	13.4ozs.(379gms.)
SS-150	Vx	Mountain bike (Triple)		1.37"x24T	68~70mm	43~45mm	13.7ozs.(389gms.)

S.B.B. HANGER ADAPTER
Model: SA-200

Specifications
Material: Light alloy (Adapter)
Cr-Mo (Bolts)
Use: For American type B.B. shell only
Adapter dimension: 51.4 mm
Thread: 1.37" x 24T
Shell width: 68~70 mm
Weight: 3.9 ozs. (110 gms.)

HUB

HUBS
Model: RH-4100
Specifications
Material: Light alloy (Body) Steel (Axle)
Type: Small flange/Quick release
Locknut-to-locknut dimension
Front: 3-13/16" (96 mm), 3-15/16" (100 mm)
Rear: 4-3/4" (120 mm), 4-7/8" (124 mm), 4-31/32" (126 mm)
Spoke drilling: 36H
Thread: 1.37" x 24T (English)
Weight: 21.2 ozs. (601 gms.)
Pair (100 mm – 126 mm)

HUBS
Model: RH-4300
Specifications
Material: Light alloy (Body) Steel (Axle)
Type: Small flange/Quick release
Locknut-to-locknut dimension
Front: 3-13/16" (96 mm), 3-15/16" (100 mm)
Rear: 4-3/4" (120 mm), 4-7/8" (124 mm), 4-31/32" (126 mm)
Spoke drilling: 36H
Thread: 1.37" x 24T (English)
Weight: 19.2 ozs. (544 gms.)
pair (100-120 mm)

3 SPEED HUB & TRIGGER LEVER

3-SPEED HUB
Model: TH-1000
Specifications
Sprocket: 16, 18, 19, 20T
Locknut-to-locknut dimension: 4-3/8" (110.9 mm)
Chain: 1/2" x 1/8"
Spoke drilling: 36H
Weight: 40-1/2 ozs. (1150 gms.)

TRIGGER LEVER
Model: TL-2000
Specifications
Use: For 3-speed hub only
Mounting position: Handle bar
Weight: 2.3 ozs. (65 gms.)

COASTER BRAKE

COASTER BRAKE
Model: CB-5000
Specifications
Material: Forged steel (Body), Steel (Axle)
Chain: 1/2" x 1/8"
Teeth: 16, 18, 19, 20T
Locknut-to-locknut dimension: 4-9/32" (109 mm)
Axle length: 6" (152 mm), 6-3/8" (162 mm)
Spoke holes: 20H, 28H, 36H
Spoke sizes: #12, #13 & #14
Axle thread: 3/8" x 24T (UNF)
Weight: 34.2 ozs. (970 gms.)

FORK ENDS

GS
Model: EF-101
Specifications
Material: Forged steel
Type: Road, Touring
Thickness: 6 mm
Fork end clearance: 9 mm
Weight: 59 g

GT
Model: EP-101
Specifications
Material: Forged steel
Type: Road, Touring
Thickness: 6 mm
Fork end clearance: 9 mm
Weight: 65 g

SDB
Model: EF-121
Specifications
Material: Forged steel
Type: Road, Touring
Thickness: 6 mm
Fork end clearance: 9 mm
Weight: 49 g

GS-III
Model: EF-170
Specifications
Material: Forged steel
Type: Road
Thickness: 7 mm
Fork end clearance: 10 mm
"D" dimension: 29 mm
Weight: 160 g (Including bolt and nut)

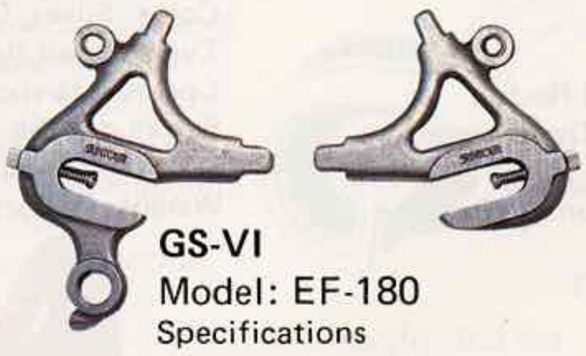

GS-VI
Model: EF-180
Specifications
Material: Forged steel
Type: Road
Thickness: 7 mm
Fork end clearance: 10 mm
"D" dimension: 29 mm
Weight: 160 g (Including bolt and nut)

Refer to the "D" dimension on page 34.

GT-III
Model: EF-200
Specifications
Material: Forged steel
Type: Road
Thickness: 7 mm
Fork end clearance: 10 mm
"D" dimension: 29 mm
Weight: 170 g
Option: Axle stopper

GT-IV
Model: EF-140
Specifications
Material: Forged steel
Type: Road
Thickness: 7 mm
Fork end clearance: 10 mm
"D" dimension: 29 mm
Weight: 160 g
Option: Axle stopper

SD-G
Model: EF-210
Specifications
Material: Forged steel
Type: Touring
Thickness: 7 mm
Fork end clearance: 10 mm
"D" dimension: 29 mm
Weight: 129 g

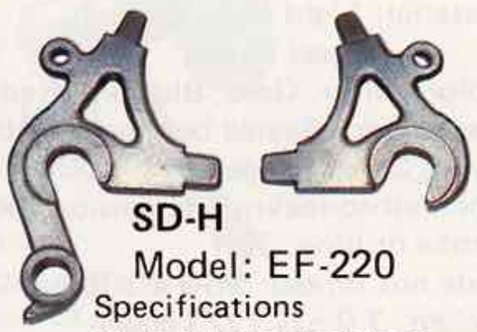

SD-H
Model: EF-220
Specifications
Material: Forged steel
Type: Touring
Thickness: 7 mm
Fork end clearance: 10 mm
"D" dimension: 29 mm
Weight: 121 g

AXLE STOPPER SET
Model: LA-100

Specifications
Material: Steel/Chromium plating
Use: GT rear ends
Weight: 0.3 ozs. (8 gms.)

ACCESSORY

INNER CAP
Model: IC-900
Specifications
Mounting position:
End of inner cable
Material: Aluminum
Purpose: To prevent cable fraying

MULTI STAND
Model: MS-100
Specifications
Use: Easy handling stand for repair work and display purposes.
Material: Steel/ plating plastic
Weight: 28.7 ozs. (814 gms.)

TRAVEL AXLE
Model: QR-180
Specifications
Material: Light alloy (Bushing, Lock nut)
Steel (Quick release)
Locknut-to-locknut dimension:
Front 100 mm
Rear 120 mm (126 mm)
Weight: 11.4 ozs. (325 gms.) pair

DUAL QUICK RELEASE
Model: QR-150
Specifications
Material: Steel
Position: Front hub
Mechanism: Safety lock
Lock nut to lock nut dimension:
96~100 mm ,
Weight: 3.0 ozs. (86 gms.)

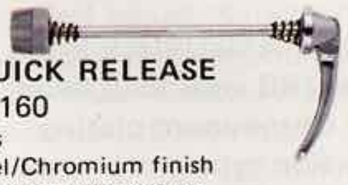

SINGLE QUICK RELEASE
Model: QR-160
Specifications
Material: Steel/Chromium finish
Locknut-to-locknut dimension:
96~100 mm,
120 mm, 124~126 mm
Weight: 2.5 ozs. (72 gms., 96~100 mm)

CABLE GUIDE (LEFT)
Model: WL-550
Specifications
Material: Steel
Weight: 0.4 ozs. (12 gms.)

CABLE GUIDE (RIGHT)
Model: WL-500
Specifications
Material: Steel
Weight: 0.2 ozs. (6 gms.)

OUTER CABLE STOP
Model: OS-500
Specifications
Material: Steel
Weight: 0.1 ozs. (3 gms.)

DERAILLEUR GUARD
Model: DG-100
Specifications
Material: Steel/Chromium finish
Use: Rear derailluer protection
Weight: 4.4 ozs. (125 gms.)

DERAILLEUR GUARD
Model: DG-200
Specifications
Material: Steel/Chromium finish
Use: Rear derailleur protection
Weight: 2.4 ozs. (67 gms.)

WIRE LEAD
Model: WL-135
Specifications
Material: Steel
Use: For Superbe tech rear derailluer only
Type: Brazed on
Mounting position: Chain stay
Weight: 0.2 ozs. (6 gms.)

QUICK BAND
Model: QP-100
SPecifications
Position: Seat tube end
Material: Cromium plating

Seat tube diameter	Weight
1-1/4" (31 mm)	4.5 ozs. (128 gms.)
1-5/16" (33 mm)	4.5 ozs. (128 gms.)

QUICK RELEASE Model: QR-100
Specifications
Position: Front hub
Locknut-to-locknut dimension: 96~100 mm
Weight: 3.4 ozs. (95 gms.)

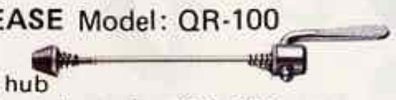

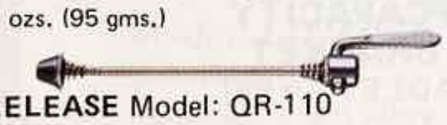

QUICK RELEASE Model: QR-110
Specifications Position: Rear hub
Use: For 5-Speed hub with lock nut to lock nut dimension of 120 mm, 124~126 mm
Weight 3.5 ozs. (98 gms.)

QUICK RELEASE Model: QR-120
Specifications Position: Seat clamp
Thread: M6 x 1, M8 x 1
Useful shank length: 22~35 mm (M6 x 1), 9~23 mm (M8 x 1) 16~30 mm (M8 x 1) 18~34 mm (M8 x 1), 28~44 mm (M8 x 1)
Weight: 2.75 ozs. (78 gms., M6 x 1)

NO.	MODEL	DESCRIPTION	SIZE	MATERIAL	WEIGHT
1	WL-130	Wire lead for Superbe tech	16.4mm	Steel	0.4ozs.(12gms.)
2	OS-100	Double outer holder	1-1/8"(28.6mm)	Steel	0.7ozs.(20gms.)
3	OS-110	Single outer holder	1-1/8"(28.6mm)	Steel	0.6ozs.(18gms.)
4	OS-120	Single outer holder (Chain stay)	5/8"(15.9mm)	Steel	0.3ozs.(8gms.)
5	OS-121	Single outer holder (Chain stay, with chain guard)	5/8"(15.9mm)	Steel	0.4ozs.(11gms.)
6	WL-100	Single cable guide	1-1/8"(28.6mm)	Steel	0.7ozs.(21gms.)
7	WL-110	Double cable guide	1-1/8"(28.6mm)	Steel	0.8ozs.(24gms.)
8	WL-120	Double cable guide (Outer less front derailleur)	1-1/8"(28.6mm)	Steel	1.3ozs.(37gms.)
9	BC-101	Single outer band (With bolt)	1-1/8"(28.6mm)	Stainless steel	0.1ozs.(4gms.)
10	BC-102	Double outer band (With bolt)	1"(25.4mm)	Stainless steel	0.1ozs.(4gms.)
11	BC-103	Single outer band (With bolt)	1"(25.4mm)	Stainless steel	0.1ozs.(2gms.)
12	BC-104	Single outer band (With bolt)	5/8"(15.9mm)	Stainless steel	0.1ozs.(2gms.)
13	BC-105	Single outer band (With bolt)	1/2"(12.7mm)	Stainless steel	0.1ozs.(2gms.)
14	RC-101	Single outer clip	1"(25.4mm)~1-1/8"(28.6mm)	Plastic	0.1ozs.(2gms.)
15	RC-103	Double outer clip	1"(25.4mm)~1-1/8"(28.6mm)	Plastic	0.1ozs.(2gms.)
16	RC-105	Double outer clip	1"(25.4mm)~1-1/8"(28.6mm)	Plastic	0.1ozs.(2gms.)
17	RC-107	Single outer clip	5/8"(15.9mm)	Plastic	0.04ozs.(1gms.)
18	RC-108	Single outer clip	1/2"(12.7mm)	Plastic	0.04ozs.(1gms.)
19	RC-109	Single outer band (With bolt)	1/2"(12.7mm)	Plastic	0.1ozs.(4gms.)
	RC-110	Single outer band (With bolt)	5/8"(15.9mm)	Plastic	0.1ozs.(4gms.)
20	RC-115	Single outer band (With bolt)	3/4"(19mm)	Plastic	0.1ozs.(4gms.)
21	RC-111	Single outer band (With bolt)	1-1/8"(28.6mm)	Plastic	0.2ozs.(6gms.)
22	RC-112	Single outer band (With bolt)	1"(25.4mm)	Plastic	0.2ozs.(6gms.)
23	RC-114	Double outer band (With bolt)	1"(25.4mm)	Plastic	0.2ozs.(5gms.)
24	RC-113	Double outer band (With bolt)	1-1/8"(28.6mm)	Plastic	0.2ozs.(6gms.)

BMX COMPONENTS ENSEMBLE

SEALED BEARING FRONT HUB
Model: BH-1000
Specifications
Material: Light alloy (Body)
Steel (Axle)
Color: Silver, Gold, Blue and Red
Mechanism: Sealed bearing, Double sealed
Type: Small flange
Locknut-to-locknut dimension: 96 mm
Spoke drilling: 36H
Axle nut thread: M10 x 1 (8 mm Flat)
Weight: 7.9 ozs. (223 gms.)

SEALED BEARING REAR HUB
Model: BH-1100
Specifications
Material: Light alloy (Body)
Steel (Axle)
Color: Silver, Gold, Blue and Red
Mechanism: Sealed bearing, Double sealed
Type: Small flange
Locknut-to-locknut dimension: 110 mm
Spoke drilling: 36H
Sprocket thread: 1.37" x 24T
Axle nut thread: M10 x 1
Weight: 10.1 ozs. (287 gms.)

FRONT HUB
Model: MH-1000
Specification
Material: Light alloy (Body)/Anodized finish
Steel (Axle)
Color: Silver, Gold, Blue and Red)
Type: Small flange
Locknut-to-locknut dimension: 93 mm, 96 mm
Spoke drilling: 36H
Axle: 3/8" x 26T
Weight: 7.2 ozs. (204 gms.)

SEALED BEARING FRONT HUB
Model: BH-1200
Specifications
Material: Light alloy (Body)
Steel (Axle)
Color: Silver, Gold, Blue and Red
Mechanism: Sealed bearing, Double sealed
Type: Large flange
Locknut-to-locknut dimension: 96 mm
Spoke drilling: 36H
Axle nut thread: M10 x 1 (8 mm Flat)
Weight: 8.7 ozs. (247 gms.)

SEALED BEARING REAR HUB
Model: BH-1300
Specifications
Material: Light alloy (Body)
Steel (Axle)
Color: Silver, Gold, Blue and Red
Mechanism: Sealed bearing, Double sealed
Type: Large flange
Locknut-to-locknut dimension: 110 mm
Spoke drilling: 36H
Sprocket thread: 1.37" x 24T
Axle nut thread: M10 x 1
Weight: 10.8 ozs. (307 gms.)

FRONT HUB
Model: MH-1500
Specification
Material: Light alloy (Body)/Anodized finish
Steel (Axle)
Color: Silver, Gold, Blue and Red)
Type: Large flange
Locknut-to locknut dimension: 93 mm, 96 mm
Spoke drilling: 36H
Axle: 3/8" x 26T
Weight: 8.2 ozs. (233 gms.)

EZ OFF FREEWHEEL
Model: MF-2000
Specifications
Material: Forged steel/C.P. or Black
Thread: BC 1.37" x 24T
CHAIN: 1/2" x 3/32", 1/2" x 1/8"
Number of teeth: 16T, 17T, 18T
Weight: 5.5 ozs. (155 gms., 16T),
6.2 ozs. (175 gms., 17T),
6.9 ozs. (194 gms., 18T)

BOTTOM BRACKET SET
Model: BB-200
Specifications
Material: Cr-Mo (Axle, Bolts)/Black finish
Steel(BB cups, Lockrings)/Chrominum plating
Type: Cotterless
Thread: BC 1.37 x 24T
Hanger Width: 68 mm
Weight: 11.1 ozs. (315 gms.)
Other: Hollowed axle

SEALED MAXIMUM CAPACITY BEARING BOTTOM BRACKET
for One-piece Crank (HADLEY TYPE)
Model: SA-180
Specifications
Material: Light alloy (Cups)
Steel (Bearing lockwasher, Lock nut)
Type: BMX one-piece crank
Cup diameter: 51.5 mm
Crank thread: Right-NS 15/16" x 24T
Left-NS 7/8" x 24T
B.B. width: 68 mm
Weight: 6.5 ozs. (185 gms.)

AXLE NUT
Model: HB-600
Specifications
Material: Light alloy/Anodized finish
Color: Silver, Gold, Blue and Red
Thread: 3/8" x 26T
Weight: 0.7 ozs. (20 gms.) pair

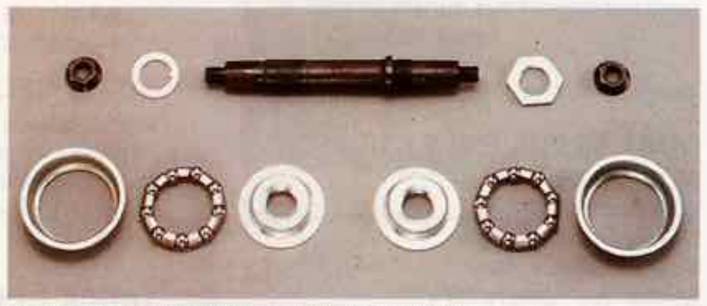

BOTTOM BRACKET SET
Model: BB-220
Specifications
Material: Cr-Mo (Axle)/Black finish
Steel (BB cups, Ball races)/
Uni Chrominum plating
Type: Conversion type
BB cup diameter: 51.5 mm
Hanger Width: 68 mm
Weight: 18.4 ozs. (520 gms.)

SINGLE THREADED REAR HUB
Model: HB-6200
Specification
Material: Light alloy (Body)/Anodized finish
Steel (Axle)
Color: Silver, Gold, Blue and Red)
Type: Small flange
Locknut-to-locknut dimension: 110 mm
Spoke drilling: 36H
Axle: 3/8" x 26T
Weight: 11.6 ozs. (327 gms.)

SINGLE THREADED REAR HUB
Model: HB-6100
Specification
Material: Light alloy (Body)/Anodized finish
Steel (Axle)
Color: Silver, Gold, Blue and Red
Type: Large Flange
Locknut-to-locknut dimension: 110 mm
Spoke drilling: 36H
Axle: 3/8" x 26T
Weight: 12.0 ozs. (340 gms.)

CHAIN RINGS
Model: CW-2100
Specifications
Material: Light alloy/Anodized finish
Color: Silver, Gold, Blue and Red
Tooth dimension: 1/2" x 3/32", 1/2" x 1/8"
Ratio: 39~48T
Weight: 3.0 ozs. (85 gms., 42T)~
4.3 ozs. (121 gms., 48T)

CHAIN RING FIXING BOLT & NUT
Model: CW-210
Specifications
Material: Steel (Bolt)/Chrominum plating
(Nut)/Uni-Chrominum plating
Type: Allen key for both sides
Tool: 5 mm allen key for bolt
6 mm allen key for nut
Weight: 1.0 ozs. (31 gms.)

GEAR CRANK
Model: CW-2000
Specifications
Material: Forged light alloy/
Anodized finish
Color: Silver, Gold, Blue and Red
Type: Cotterless
Crank length: 170 mm, 175 mm
Thread: BC 9/16" x 20T
Weight: 18.9 ozs. (535 gms., 170 mm)

GEAR CRANK
Model: CW-1600
Specifications
Material: Light alloy/
Anodized finish
Color: Silver, Gold, Blue and Red
Type: Cotterless
Crank length: 152 mm
Thread: BC 9/16" x 20T
Weight: 14.1 ozs. (400 gms.)

PEDAL
Model: MP-1000
Specifications
Material: Light alloy
(Body, Plate)/Anodized finish
Cr-Mo (Axle)/Brack finish
Color: Silver, Gold, Blue and Red
Mechanism: Seald bearing, Hollowed axle
Width: 60 mm
Type: Detachable plate
Thread: BC 9/16" x 20 T
Weight: 11.2 ozs. (316 gms.) pair

MINI STEM
Model: MS-1000
Specifications
Material: Forged light alloy
(Body, Clamp)/Anodized finish
Cr-Mo (Bolts, Extension bolt)
Color: Silver, Gold, Blue and Red
Extension: 16 mm
Clamp diameter: 7/8" (22.2 mm)
Stem diameter: 21 mm
Weight: 11.9 ozs. (338 gms.)

POWER STEM
Model: MS-1100
Specification
Material: Forged light alloy
(Body, Clamp)/Anodized finish
Cr-Mo (Pipe, Bolts, Extension bolt)
Color: Silver, Gold, Blue and Red
Extension: 41 mm
Clamp diameter: 7/8" (22.2 mm)
Stem diameter: 21 mm
Weight: 18.4 ozs. (520 gms.)

POWER STEM
Model: MS-1200
Specification
Material: Light alloy
(Body, Clamp)
Cr-Mo
(Pipe, Bolts, Extension bolt)
Color: Silver and Black
Extension: 38 mm
Clamp diameter: 7/8" (22.2 mm)
Stem diameter: 21 mm
Weight: 18.4 ozs. (522 gms.)

HEAD LOCK UP
Model: HL-1000
Specifications
Material: Forged light alloy/Anodized finish
Color: Silver, Gold, Blue, Red and Black
Thread: BC 1" x 24T
Clamp diameter: 21 mm
Weight: 1.2 ozs. (33 gms.)

SEAT CLAMP
Model: MC-1000
Specifications
Material: Forged light alloy
/Anodized finish
Color: Silver, Gold, Blue and Red
Clamp diameter: 1" (25.4 mm),
1-1/8" (28.6 mm)
Weight: 1.7 ozs. (49 gms., 1-1/8")

SPECIAL TOOLS

Allen Key

Model:	Weight
TA-150 (6 mm)	1.0 ozs. (29 gms.)
TA-200 (5 mm)	0.6 ozs. (18 gms.)
TA-140 (4 mm)	0.4 ozs. (10 gms.)
TA-190 (2.5 mm)	0.1 ozs. (2 gms.)

REMOVER
Model: TA-250
Specification
Material: Forged steel/Black finish
Use: Micro lite freewheel, Removal tool
Weight: 1.4 ozs. (39 gms.)

REMOVER
Model: TA-100
Specification
Material: Forged steel/Black finish
Use: Boss type multiple freewheel, Removal tool
Weight: 1.5 ozs. (42 gms.)

REMOVER
Model: TA-101
Specification
Material: Forged steel/Black finish
Use: Boss type multiple freewheel and single freewheel, Removal tool
Weight: 3.4 ozs. (95 gms.)

REMOVER
Model: TA-103
Specifications
Material: Forged steel/Black finish
Use: EZ off freewheel, Removal tool
Weight: 3.9 ozs. (110 gms.)

T WRENCH
Model: TA-270
Specifications
Material: Cr-Mo/Chromium plating
Use: For tension pulley nut
Other: With 5 mm, 6 mm allen key
Weight: 3.0 ozs. (85 gms.)

FREEWHEEL & HUB VICE
Model: TA-120

Specifications
Material: Steel/Black finish & Uni chrominum plating
Weight: 7.2 ozs. (204 gms.)

WIRE CUTTER WITH CRIMPER
Model: TA-110
Specifications
Material: Steel/Black finish
Weight: 4.0 ozs. (113 gms.)

CHAIN TOOL (Use for ULTRA-6 only)
Model: TA-170
Specifications
Material: Steel/Uni chrominum plating
Weight: 5.8 ozs. (165 gms.)

SPROCKET REMOVER
Model: TA-130
Specifications
Material: Steel/Black finish
Weight: 12.2 ozs. (346 gms.)

SPROCKET REMOVER
(Use for ULTRA-6 only)
Model: TA-131
Specifications
Material: Steel/Black finish
Weight: 11.3 ozs. (319 gms.)

HUB ADJUSTING SPANNER
Model: TA-260
Specifications
Material: Steel/Chrominum plating
Use: Seald bearing hub
Head lock up nut
Weight: 3.7 ozs. (105 gms.)

ADJUSTMENT WRENCH
(Use for NEW WINNER only)
Model: TA-180
Specifications
Material: Steel/Black finish
Weight: 3.9 ozs. (110 gms.)

HUB SPANNER
Model: TA-210
Specifications
Material: Steel/Black finish
Use: Hub 16 mm x 19 mm
Weight: 2.3 ozs. (65 gms.)

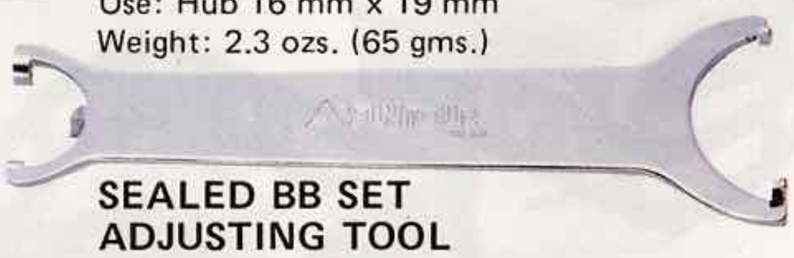

SEALED BB SET ADJUSTING TOOL
Model: TA-230
Specifications
Material: Steel/Chrominum plating
Use: Sealed B.B. set
Weight: 3.7 ozs. (105 gms.)

BOX WRENCH
Model: TA-240
Specifications
Material: Steel/Chromium plating
Use: 14 mm/15 mm Hexagon Bolts and Nuts
Weight: 3.1 ozs. (88 gms.)

Using The Chain Tool TA-170

1) To link the chain

First, turn the set screw all the way clockwise (Direction A). (Fig. 1) Unless you do this, the link pin may not be properly lined up.

Then, place the two ends of the chain into the chain tool with the pin facing away from the set screw. Link the chain by turning the handle clockwise all the way in until it stops (Fig. 2). Now, bends the chain back and forth with your hands at either side of the connection which you just made to loosen the link.

(Fig-1)

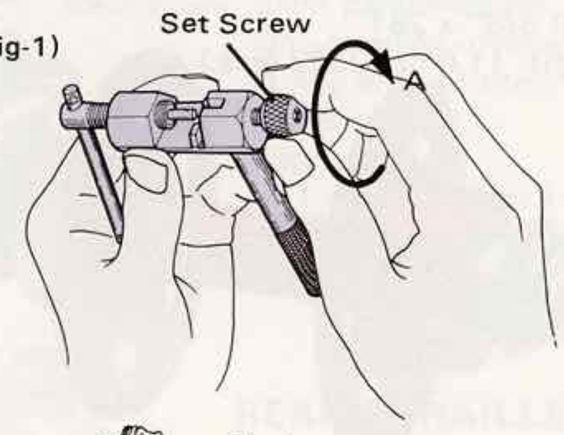

(Fig-2)

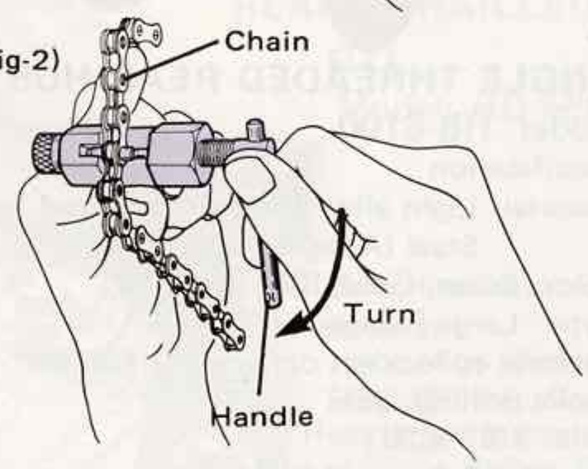

2) To disconnect the chain

Loosen the set screw by turning counter-clockwise (Direction B) all the way out until it stops. Unless the set screw is all the way out, the link pin may fail to come out of the chain. (Fig. 3) Then, place the chain into the tool, and turn the handle clockwise until it stops. (Fig. 4) Turn the handle counter-clockwise until you can remove the chain; then bend the chain slightly when the pin has been driven out, to disconnect the link.

(Fig-3)

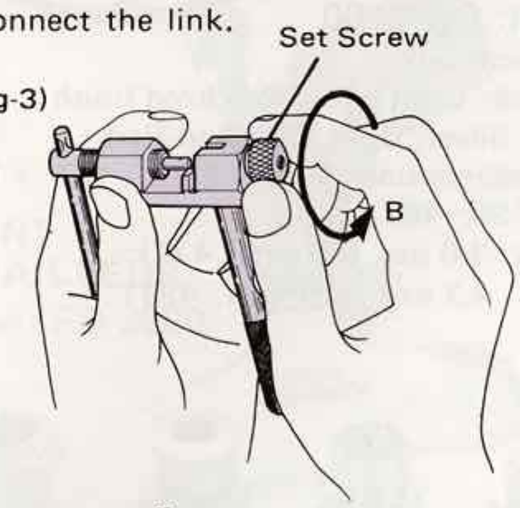

(Fig-4)

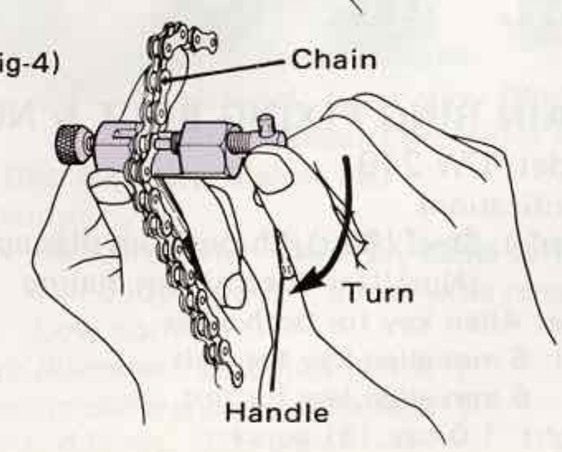

Using A Freewheel Adjusting Wrench TA-180

Adjusting Freewheel Rotation

(1) On the Ultra-7 and Standard 6 speed, the first and second sprockets must be removed before the adjusting cone becomes accessible.
If the freewheel is an Ultra-6 or Standard 5 speed, start with (3) below.

(Fig. 1)

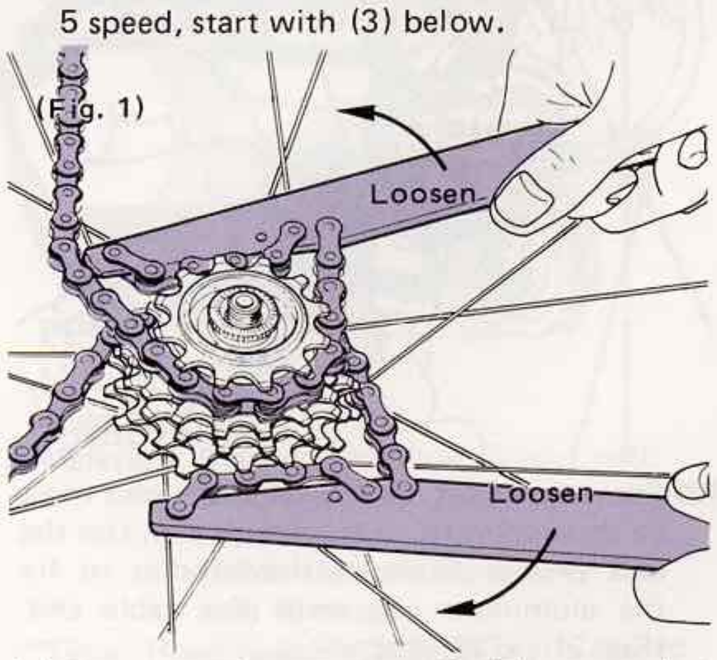

(2) To remove them, wrap a SunTour sprocket remover around the second sprocket and, while holding the freewheel with another sprocket remover or a freewheel vise, turn the sprocket counter-clockwise.

(Fig. 2)

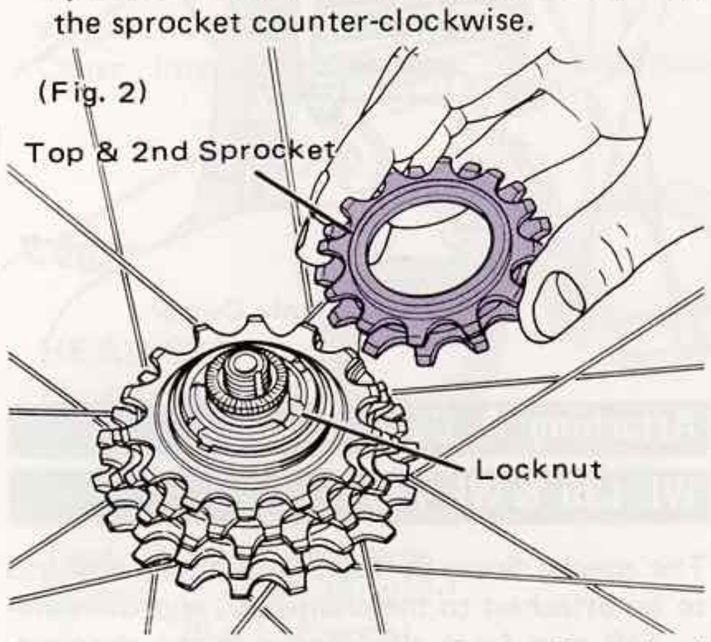

(3) Using the smaller end of the Freewheel Adjusting Wrench ("A" in the illustration below), place the tool's prongs into the slots of the locknut. Keep the tool in place with the quick release. Now twist counter-clockwise until the locknut is quite loose. If the locknut is hard to start, a slight clockwise twist will free it.

(Fig. 3)

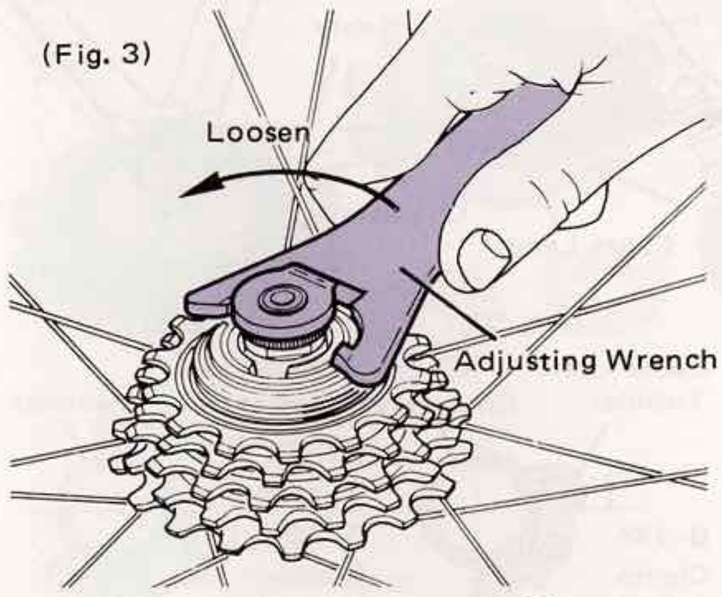

Using A Sprocket Remover TA-131

(4) Using the wider end of the Freewheel Adjusting Wrench ("B" in the illustration), place the tool's prongs into the grooves of the adjusting cone, and tighten or loosen until you achieve smooth rotation without sideplay.
Clockwise loosens; counter-clockwise tightens.
When the bearings are adjusted to your satisfaction, tighten the locknut, keeping the tool in place with the quick release.

(Fig. 4)

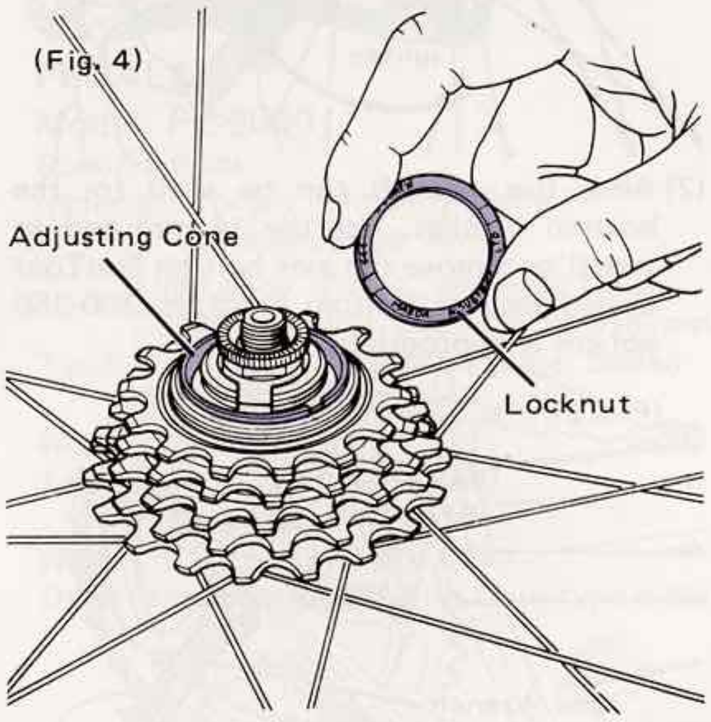

(5) If you wish to clean and relubricate the bearings, follow the above steps; then remove the locknut, lock washer and adjusting cone. The freewheel body will now come apart for cleaning and lubricating.

(Fig. 5)

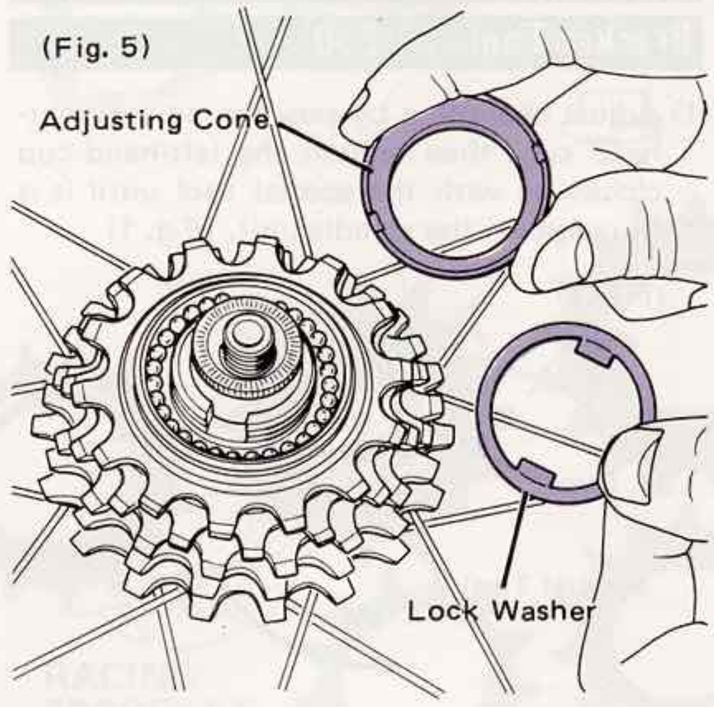

Removing Sprockets

(1) Place a SunTour Freewheel Remover so that the tool's prongs fit into the slots of the freewheel body. Reinstall the quick release lever and tighten just enough to keep the tool from disengaging from the freewheel. Then, turn the freewheel remover counter-clockwise with a large wrench until the freewheel has come off.

(2) Using a SunTour Freewheel Vise or Sprocket Remover to hold the freewheel, wrap a Sprocket Remover around the smallest sprocket and twist it off in a counter-clockwise direction. Then remove the next smallest sprocket the same way; and continue for all of the threaded sprockets. In this event, a SunTour Ultra Sprocket Remover (Remover with Ultra Size Chain) is recommended, as it fits all New Winner freewheels, whereas the Standard Sprocket Remover will not fit the closer Ultra-6 and Ultra-7 sprocket spacing.

(Fig. 1)

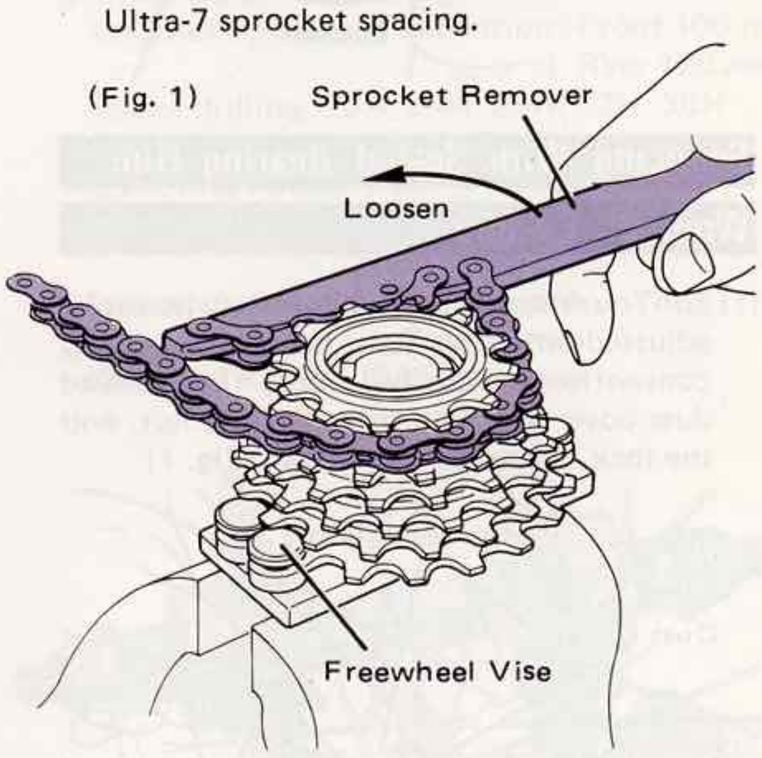

(3) The two largest sprockets on a New Winner freewheel are splined, and can be removed by hand once all of the other sprockets, which are threaded, have been removed.

(Fig. 2)

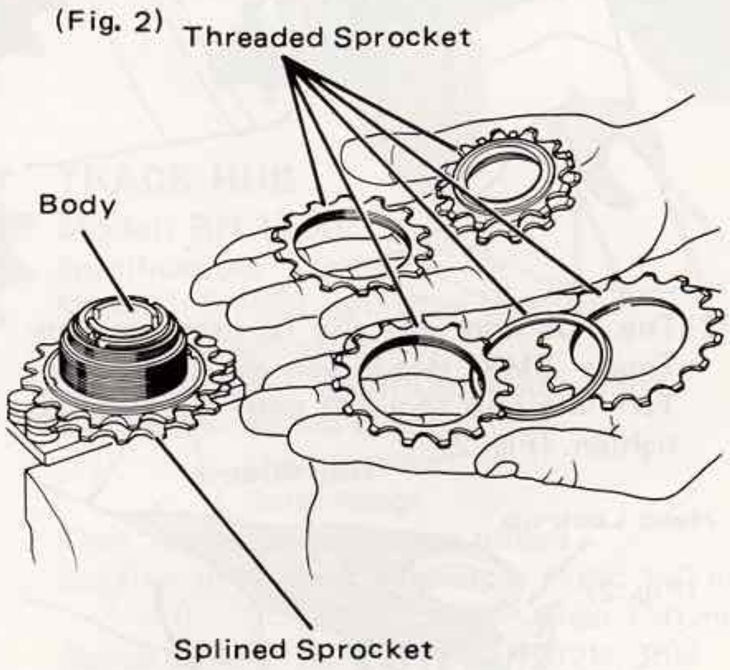

Using A Freewheel Remover TA-100

Place a SunTour Freewheel Remover so that the tool's prongs fit into the slots of the freewheel body. Reinstall the quick release lever and tighten just enough to keep the tool from disengaging from the freewheel. If the wheel is of the bolt-on type, use an axle nut in place of the quick release lever. Turn the freewheel remover counter-clockwise with a large wrench, or grasp it in a bench vise and turn the wheel counter-clockwise, until the freewheel has come off.

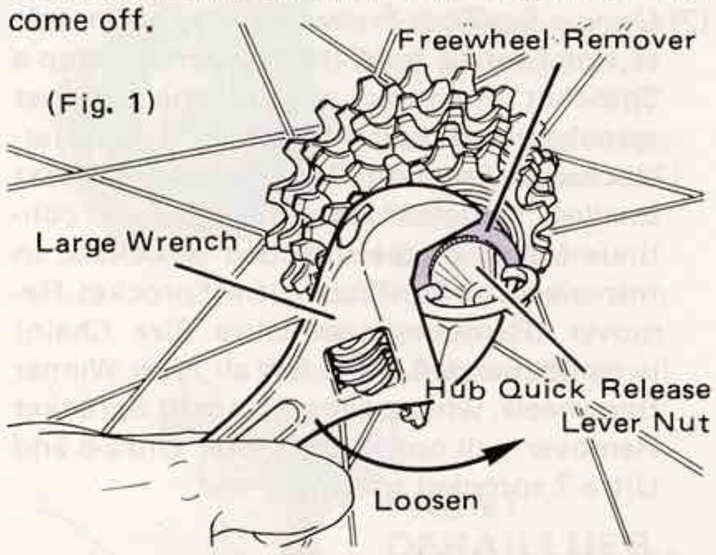

Servicing With Sealed Bearing Hub Wrench TA-260

(1) SunTour's sealed bearing hubs can be easily adjusted with this tool, just like adjusting conventional loose ball hubs. The grooved dust cover acts like the adjusting nut, and the lock nut holds it in place. (Fig. 1)

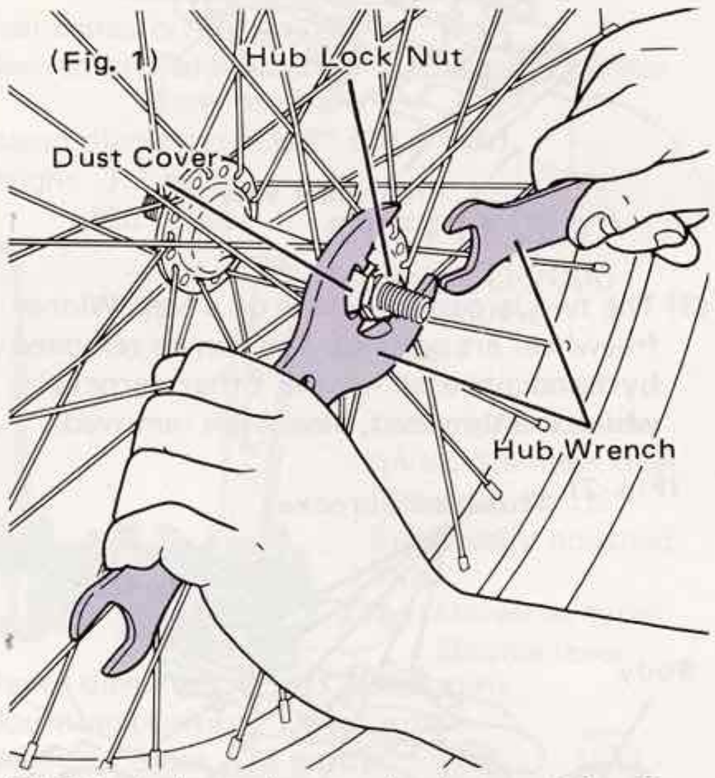

(2) This hub tool can also be used for SunTour's BMX Head-Lock up (HL-1000). Turn the hub tool (30 mm) clockwise to tighten. (Fig. 2)

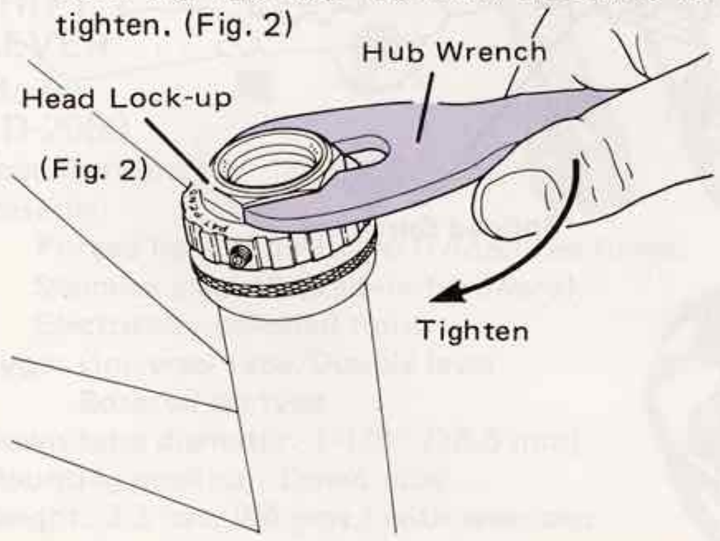

Using A Box Wrench TA-240

(1) The Box Wrench can be used for track hubs. Use the 15 mm end to tighten the hub nuts with 200-250 kgf-cm torque force for the front hub and 300-350 kgf-cm for the rear hub. (Fig. 1)

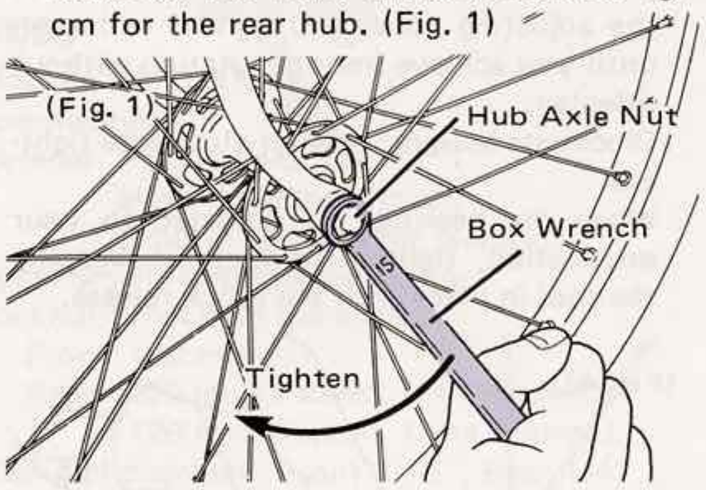

(2) Also, this wrench can be used for the bottom bracket. Use the 14 mm end to install or remove the axle bolt on SunTour Sealed Bearing Bottom Brackets. 300-350 kgf-cm is appropriate. (Fig. 2)

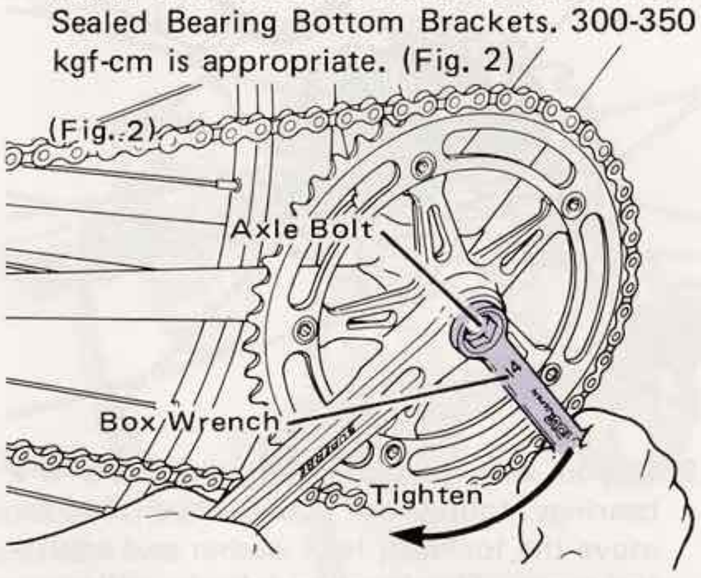

Adjusting With A Special Bottom Bracket Tool TA-230

(1) Adjust chain line by positioning the right-hand cup, then tighten the left-hand cup clockwise with the special tool until it is snug against the spindle unit. (Fig. 1)

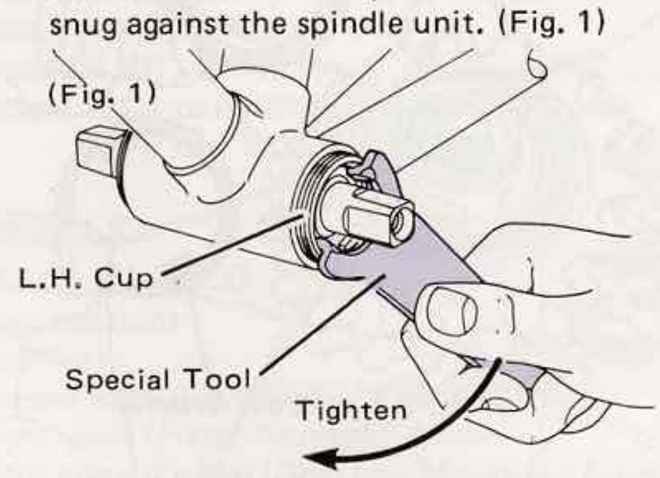

(2) Maintaining the smooth spindle rotation obtained, tighten both right- and left-hand lock rings with the tool. (Fig. 2)

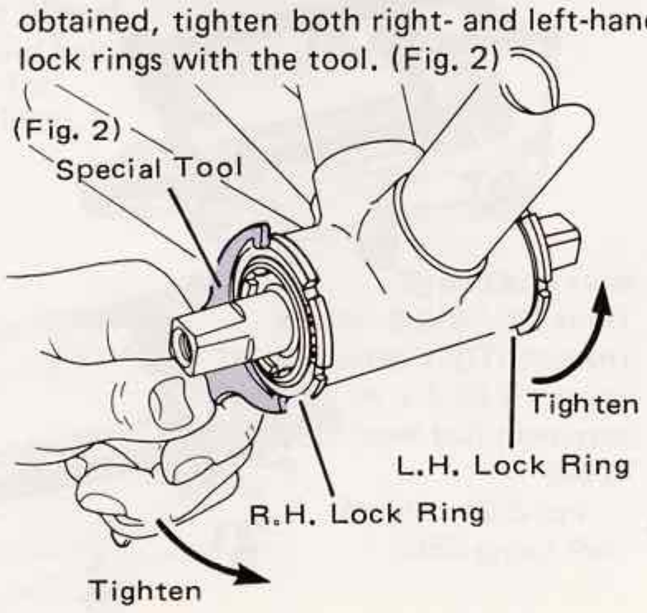

Using A Cable Cutter TA-110

(1) The cable cutter may be used for SunTour derailleur or brake cables. This tool has special cutting edge profile to prevent the cable end from getting unraveled when cutting it. (Fig. 1)

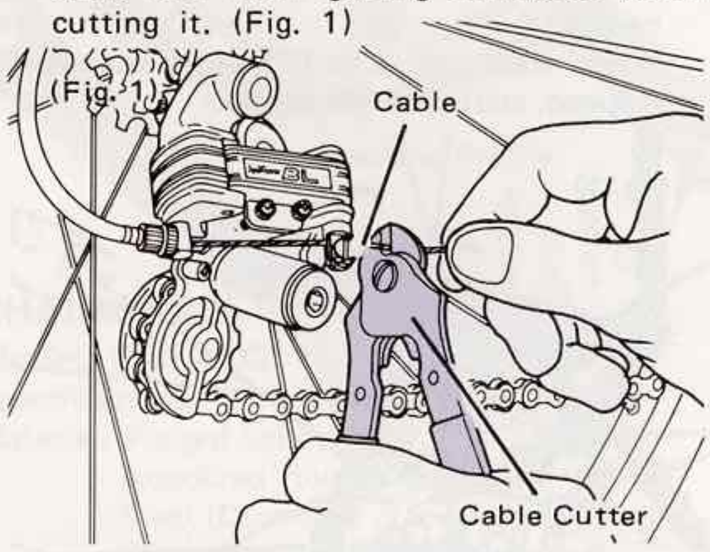

(2) For safety, the derailleur cable end must be covered with an aluminum cap. Use the two prongs between the handles to fix the aluminum cap onto the cable end. (Fig. 2)

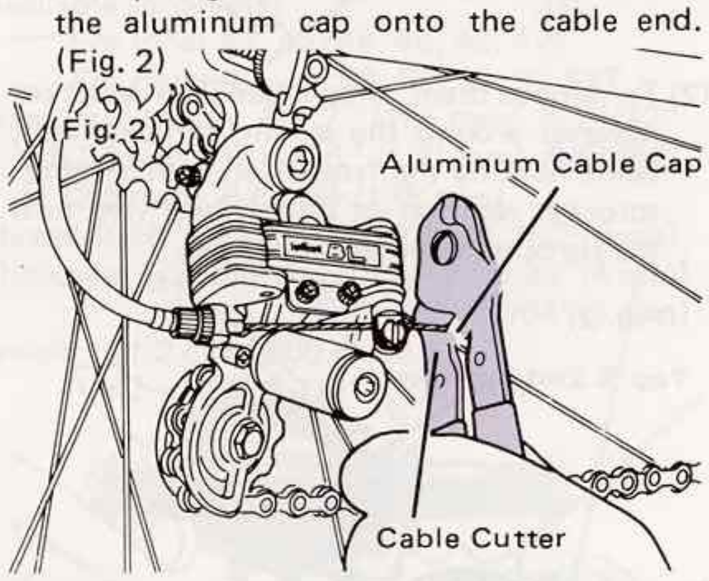

Attaching A Cable Lead WL-130 & WL-135

The special Superbe-Tech Cable Lead requires to be attached to the chainstay, approximately 140 mm from the center of the dropout. (Fig. 1)

If the control cable runs above the bottom bracket shell, install the clamp at the angle shown in Fig. 2. If the cable runs under the bottom bracket, install at the angle shown in Fig. 3.

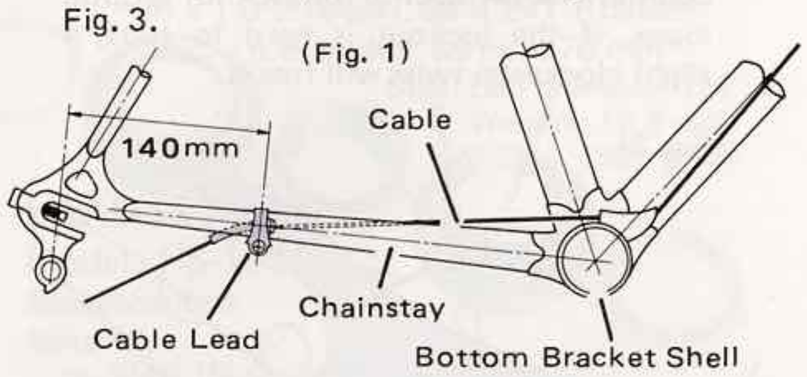

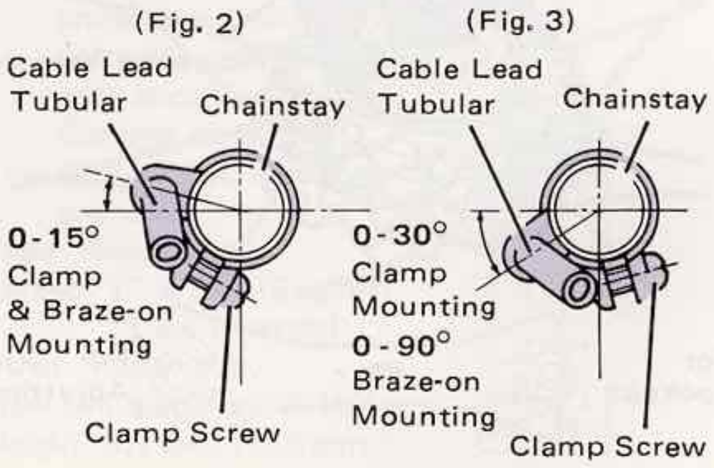

Brazing A Cable Guide WL-500, WL-550

The relationship of the angle of the shift cable and the cable guide is not functionally critical; but if you want the cable to run parallel to the downtube, SunTour's cable guide fittings, Model: WL-500 (R.H.) should be positioned as follows:

For Top-Mount Shift Levers
Tip of the triangle is on the top center of the Bottom Bracket (Fig. 1)

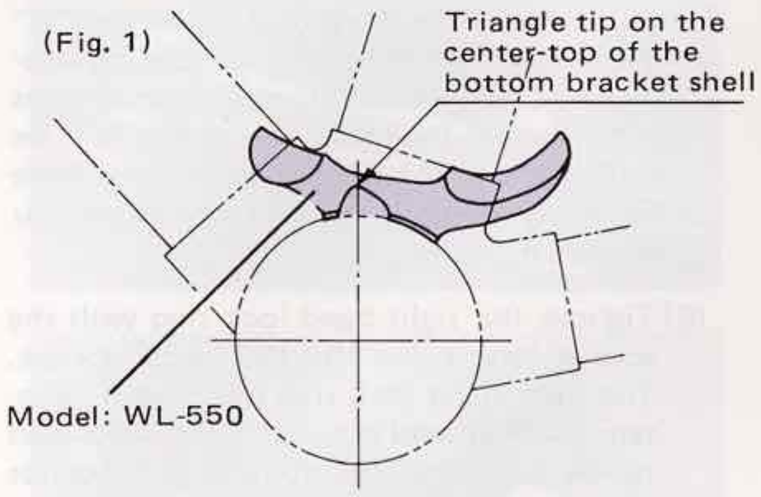

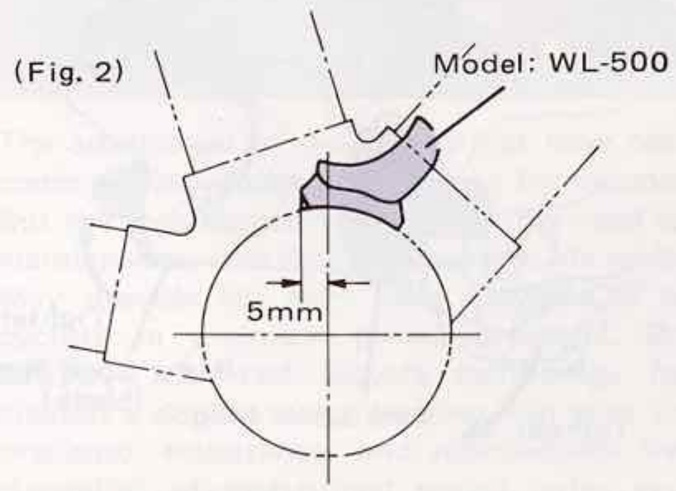

For Conventional Shift Levers
1.5 mm or less should be overlapped. (Fig. 3)
Rear edge is on the top center of the Bottom Bracket. (Fig. 4)

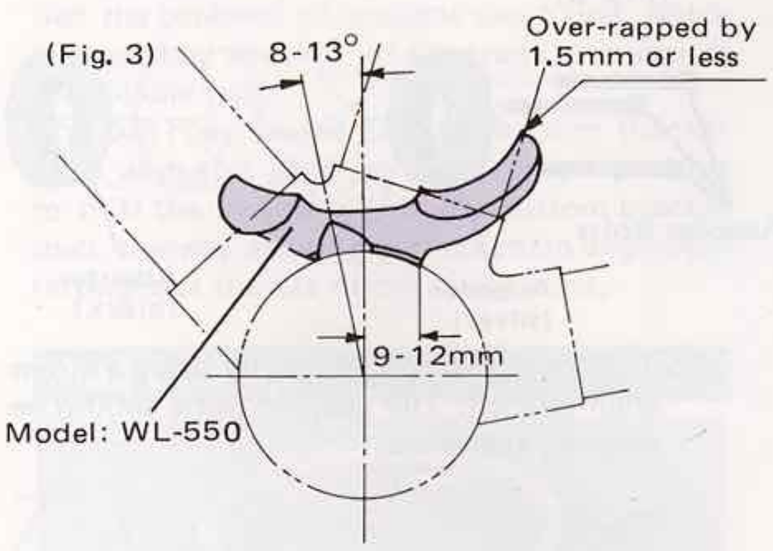

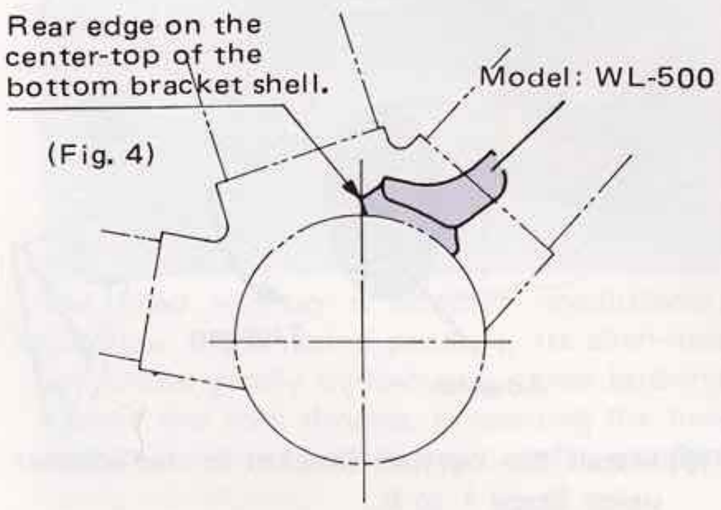

New Winner Specifications

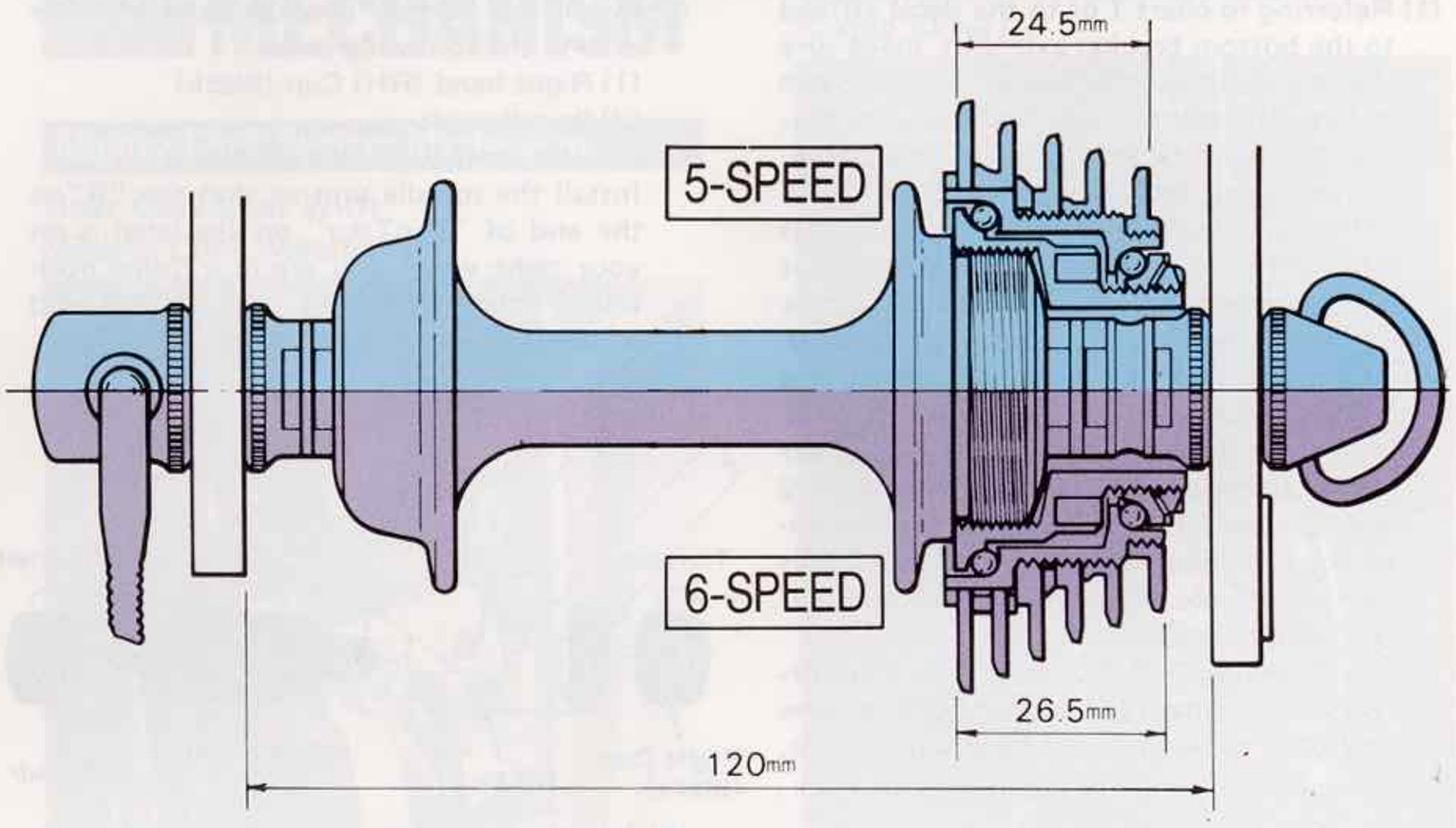

Relationship between freewheel, chain & hub

Freewheel size	Hub size (Locknut-to- locknut dim.)	Chain
5-speed (Regular size)	120 mm	Ultra-6 or Regular
6-speed (Ultra size)		Ultra-6

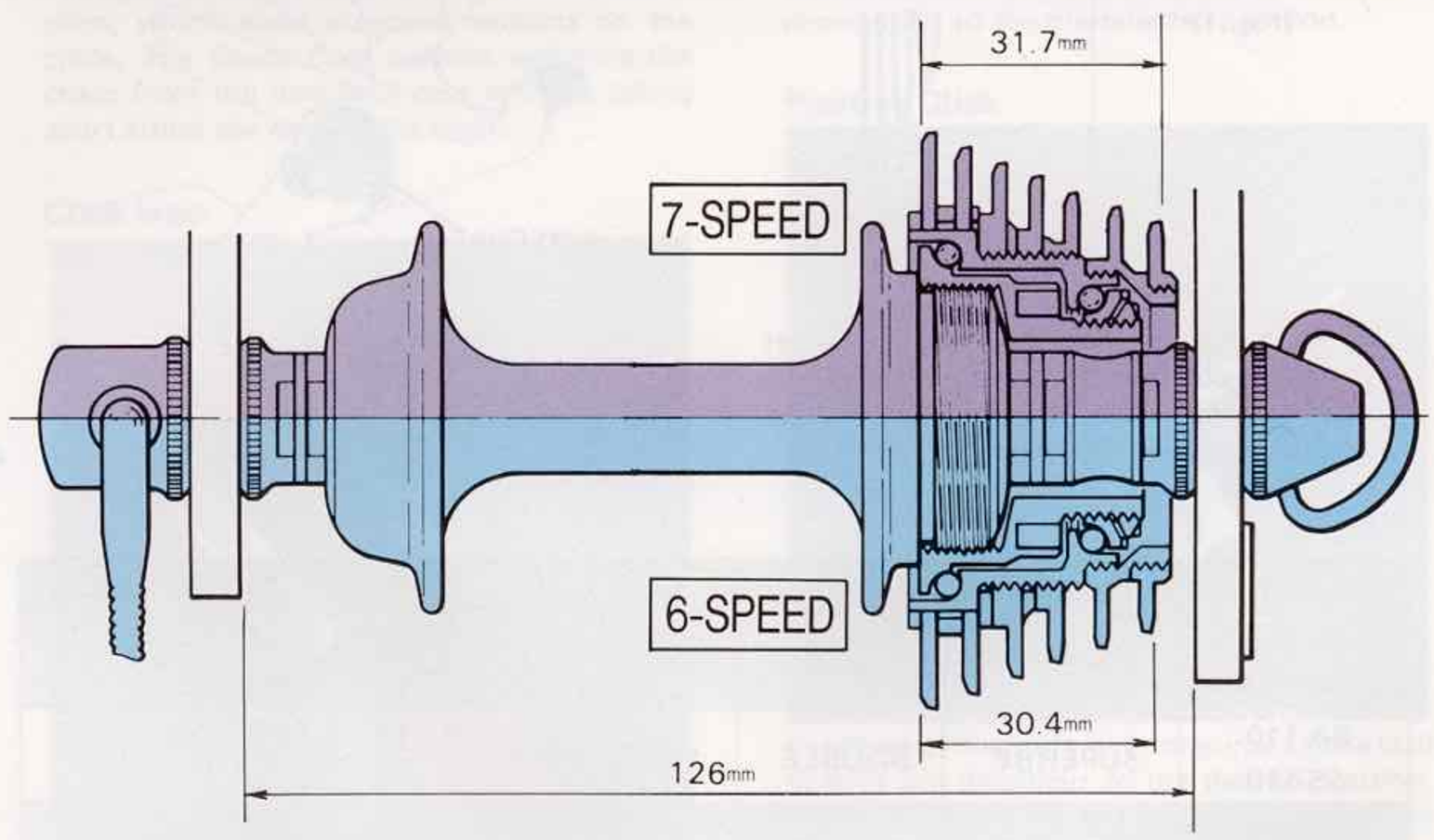

Relationship between freewheel, chain & hub

Freewheel size	Hub size (Locknut-to- locknut dim.)	Chain
7-speed (Ultra size)	126 mm	Ultra-6
6-speed (Regular size)		Ultra-6 or Regular

How To Install The Sealed Bearing Bottom Bracket

(1) Referring to chart 1 or to the decal affixed to the bottom bracket axle unit, make sure that your unit has the proper spindle length (A), shell dimension (C), chain line dimension (CL) and taper length for your frame. If you are installing a track or BMX crankset, the chain line dimension (CL) is from the center of the frame to the center of the chainring. If you have a double crankset, measure CL from half way between the two chainrings. If you have a triple crankset, measure CL from the middle of the center chainring. The SunTour sealed bottom bracket spindles have a 2 degree taper. If your crank set was designed for a spindle with a different taper, this may affect the chainline dimension. You can compensate by referring to chart 1.
The formula D=B-C/2 gives you the correct measurement if your bicycle's bottom bracket shell width is not 68mm or 70 mm.

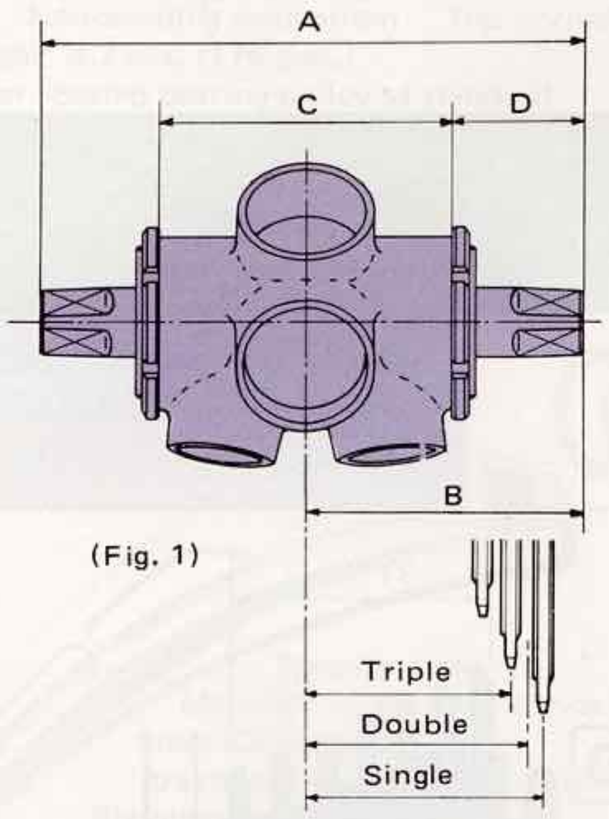

(Fig. 1)

(2) It is important that the bottom bracket shell of your frame is properly "faced", in that the shell edges must be parallel and at right angles to the spindle centerline.

(3) Install the bottom bracket parts into the shell in the following order:
(1) Right hand (RH) Cup (black)
(2) Spindle unit
(3) Left hand (LH) Cup (silver)
Install the spindle unit so that the "R" at the end of "SunTour" on the label is on your right when you are in a riding position. The right hand cup is threaded counterclockwise, and is black. (See Fig. 2)

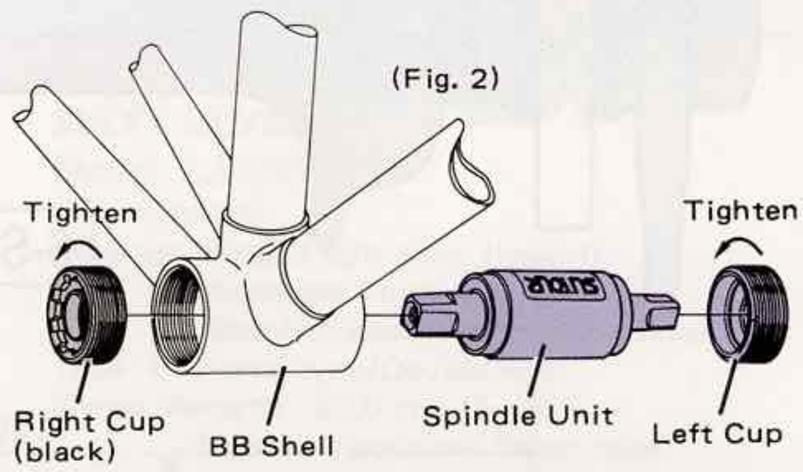

(Fig. 2)

(4) Adjust dimension D by positioning the right hand (RH) cup. Counterclockwise moves it in; clockwise moves it out. Then with the spindle unit snugly in the right hand cup, tighten the left hand cup clockwise, using the special tool available from SunTour (See Fig. 3 and photo below), until it is snug against the spindle unit. Overtightening will bind the spindle; undertightening will result in spindle play.

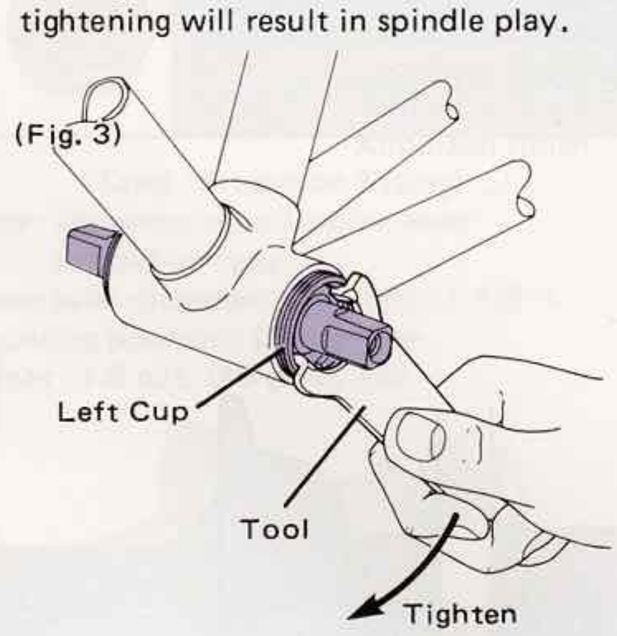

(Fig. 3)

(5) Install the right hand crank on the spindle taper and tighten the bolt by using a 14 mm crank wrench. Use 300 to 350 kg-cm torque. After tightening, measure the chain line dimension (CL). If the chain line dimension differs from that given in Chart 1, remove the right hand crank using a crank puller. Readjust the chain line dimension following the directions in Step 4. For example, if your measurement is 43 mm, but it should be 42 mm, decrease the "D" dimension by 1 mm. Removal and replacement of the RH crank arm several times will decrease the chain line dimension. Be sure to check this dimension and make the necessary adjustments each time when you remove or replace the crank.

(6) Tighten the right hand lock ring with the special tool, using 100-130 kg-cm torque. The right hand lock ring is threaded counterclockwise, and is black. Turn the cranks to be sure that the spindle still rotates freely; then tighten the left hand lock ring.

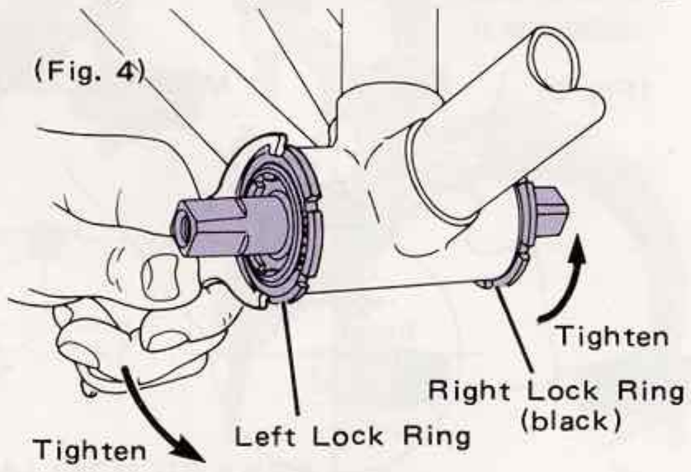

(Fig. 4)

(7) If you have an American (Ashtabula) type bottom bracket shell, use the special adapter as shown in Fig. 5. The RH side of the adapter is black.

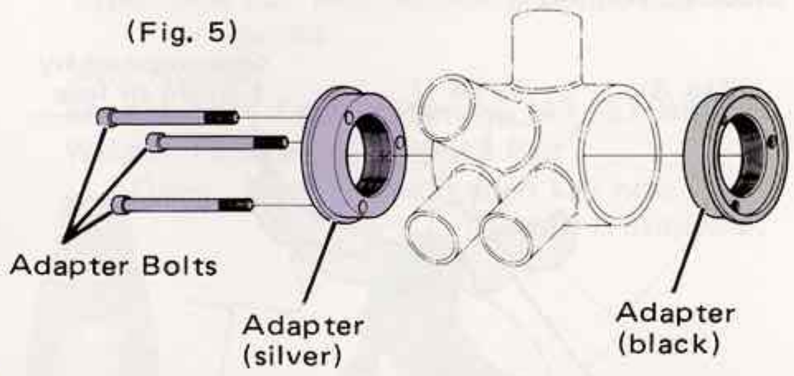

(Fig. 5)

(8) Tighten the adapter bolts by using a 4 mm allen wrench. The adapter bolts should be securely tightened.

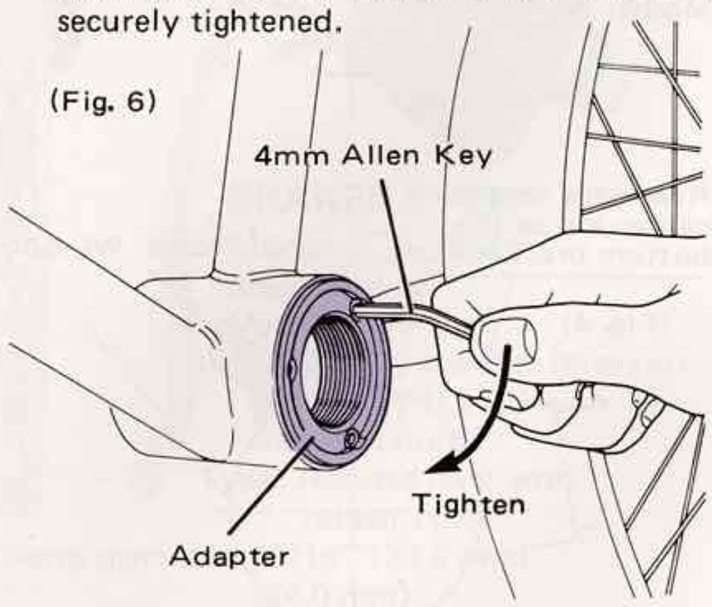

(Fig. 6)

(9) Install the bottom bracket in the adapter using Steps 1 to 6.

(Chart-1)

Model. No.	Taper Size	Type	A	B	C	D	C.L
SA-100	SUPERBE	TRACK	108	54	68	20	42
SS-100					70	19	
SA-110	SUPERBE	DOUBLE	117	58.5	68	24.5	43.5
SS-110					70	23.5	
SA-120	SUPERBE	TRIPLE	120	63.5	68	29.5	45
SS-120					70	28.5	
SA-130	SUPERBE	BMX	126	61.25	68	27.25	41.75
SS-130					70	26.25	
SA-140	VX	BMX	126	64.75	68	30.75	41.75
SS-140					70	29.75	
SA-160	VX	TRIPLE	126	66	68	32	43~45
SS-160					70	31	
SS-150	VX	MTB TRIPLE	130	66	68	32	43~45
					70	31	

How To Install The Rear Derailleur

1) Angle Adjustment

Push the derailleur inward with one hand, until the guide pulley is under the second smallest cog. With the other hand and a screwdriver, turn the angle adjusting screw, until the derailleur body is parallel to the chainstay. (Fig. 1)

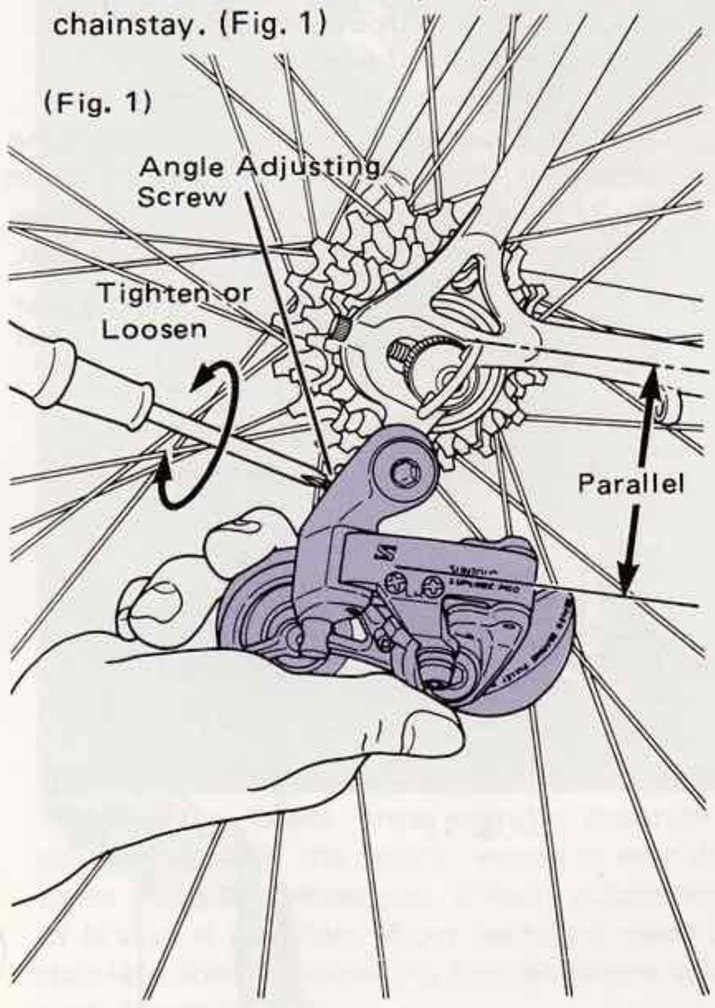

2) Shift Adjustment

(1) High Gear Limit

Adjust the high gear limit screw (H) so that the guide pulley centers directly under the smallest freewheel cog. (Fig. 2) Clockwise moves the pulley in; counterclockwise moves it out.

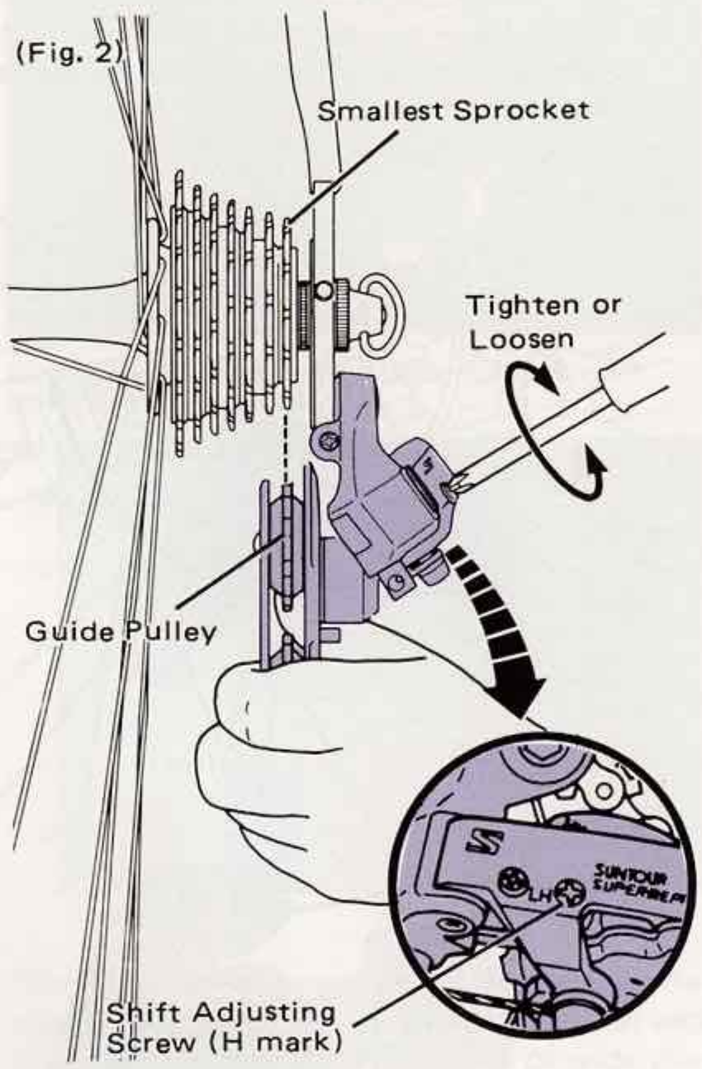

(2) Low Gear Limit

While turning the cranks forward slowly, gently pull the right shift lever back until you have shifted the chain on to the largest rear sprocket and the guide pulley is directly under the largest rear sprocket. (Fig. 3) If the pulley will not move far enough, turn the low gear limit screw (L) counterclockwise until it does. Now turn the (L) adjusting screw clockwise until you see the pulley begin to move.

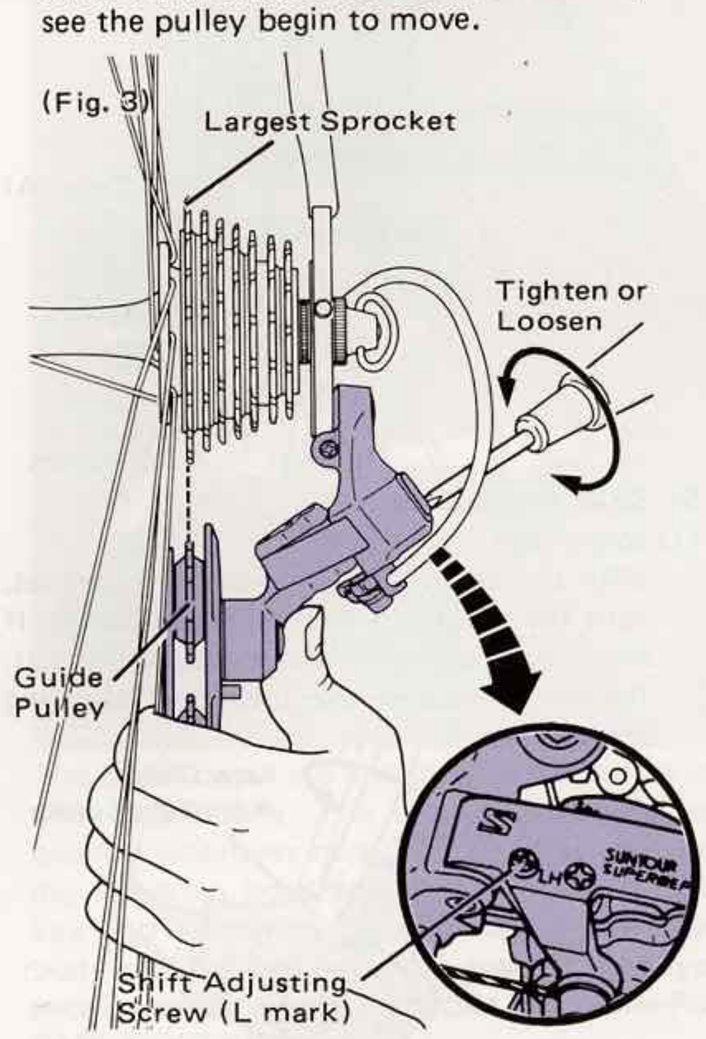

3) Proper Chain Length

Proper length of the chain gives the derailleur cage an ideal angle of 45 degrees with the ground for smooth gear shifting. (Fig. 4)

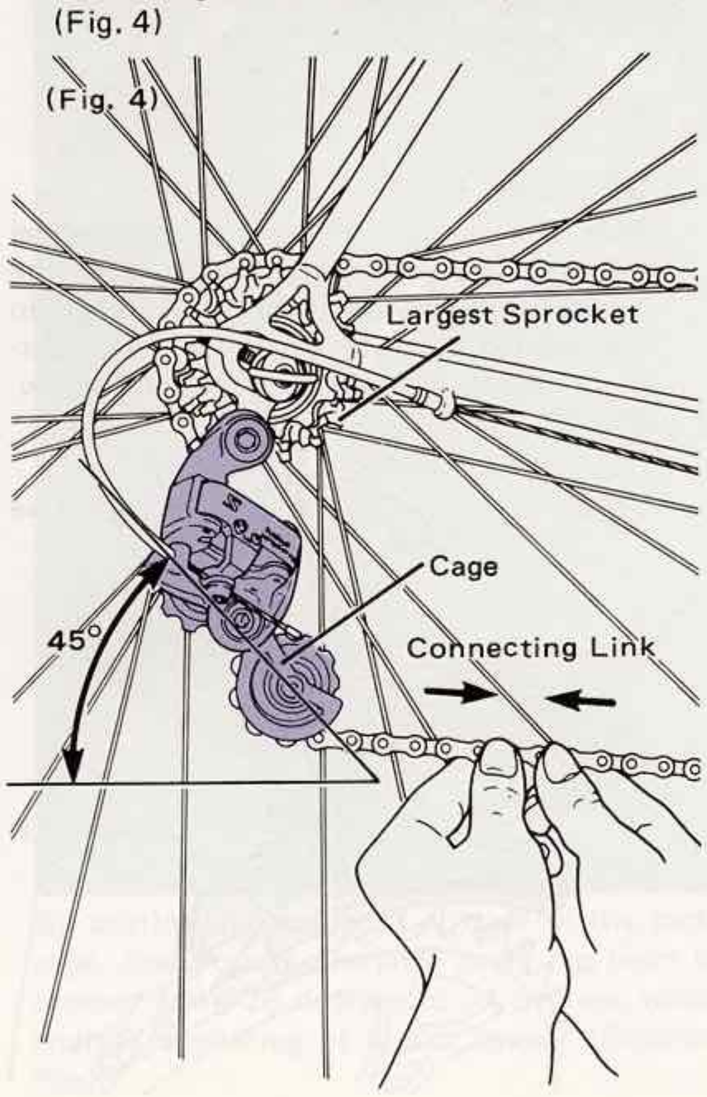

Mounting The Superbe-Tech L, Moun Tech & AG-Tech Rear Derailleurs

(1) Install the chain. The chain length is correct on this derailleur when, with the chain on the smallest front and rear sprockets, the cage forms at least a 20-25 degree angle with the road. (Fig. 5)

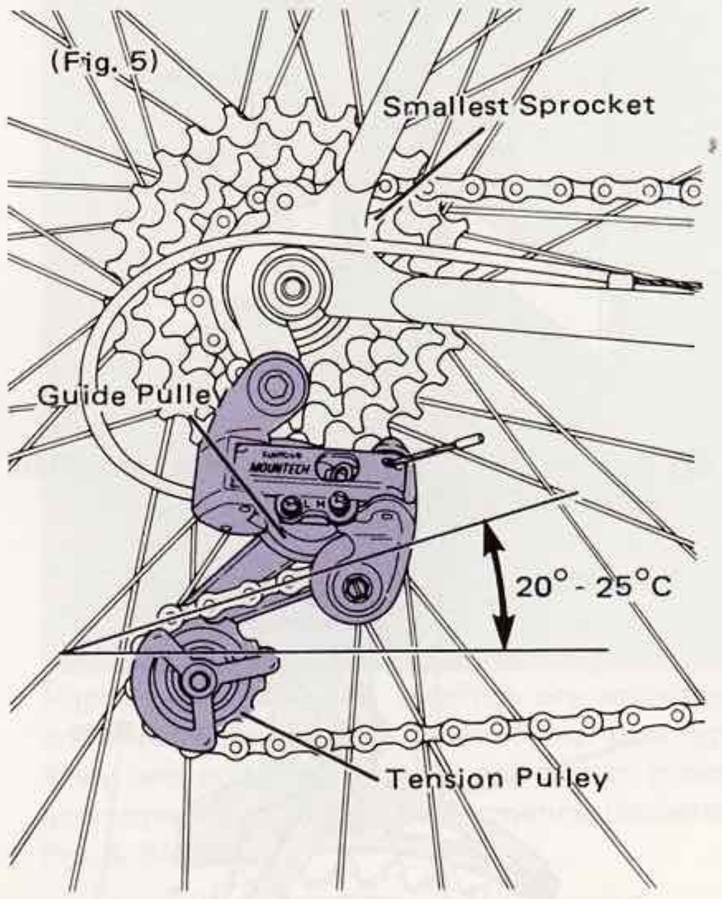

(2) With the chain on the largest rear sprocket, put the chain on the largest front sprocket. If the chain does not bend where it passes over the guide pulley, the chain is too short, and you must add links until a line through the centers of the guide and tension pulley forms about a 45 degree angle with the road. (Fig. 6)

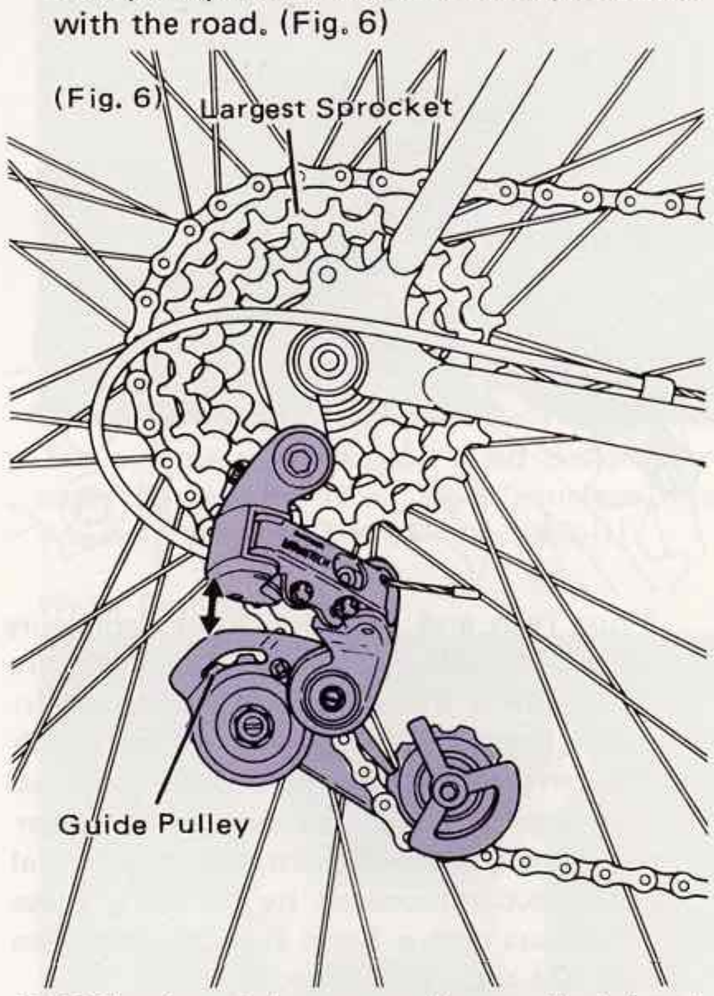

(3) Shift the chain on to the smallest front and rear sprockets, and make sure that the cage angle is not less than 20 degrees. If it is, or the chain is slack, you have exceeded the derailleur's capacity. Reduce the gear range, or get a SunTour derailleur with larger capacity.
(See the Gear Capacity Chart)

How to Install The Front Derailleur

1) Endless Clamp (Superbe-Pro, Superbe, Cyclone M-II)

(1) Place the frame clamp around the seat tube, and tighten the set screw (Fig. 1)

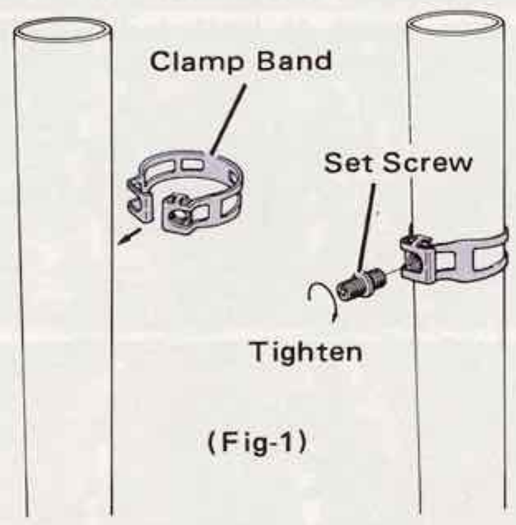

(Fig-1)

(2) Tighten the clamp bolt with an allen wrench (6 mm). (Fig. 2)

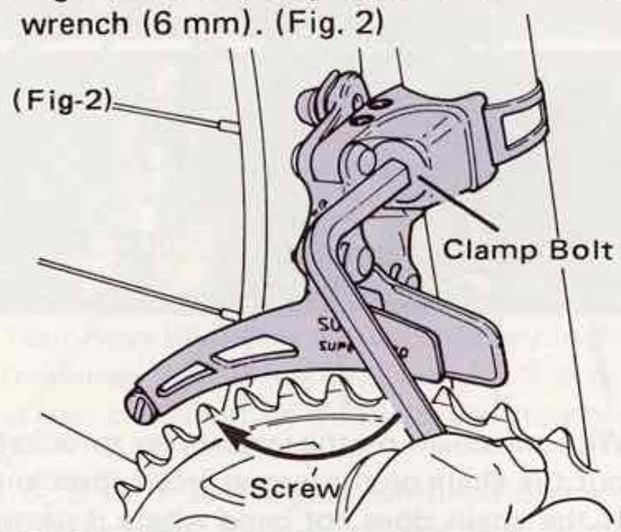

2) Position The Derailleur Body

(1) Position the derailleur so that the outer cage plate (A) clears the outermost chainring by 1 to 3 mm.

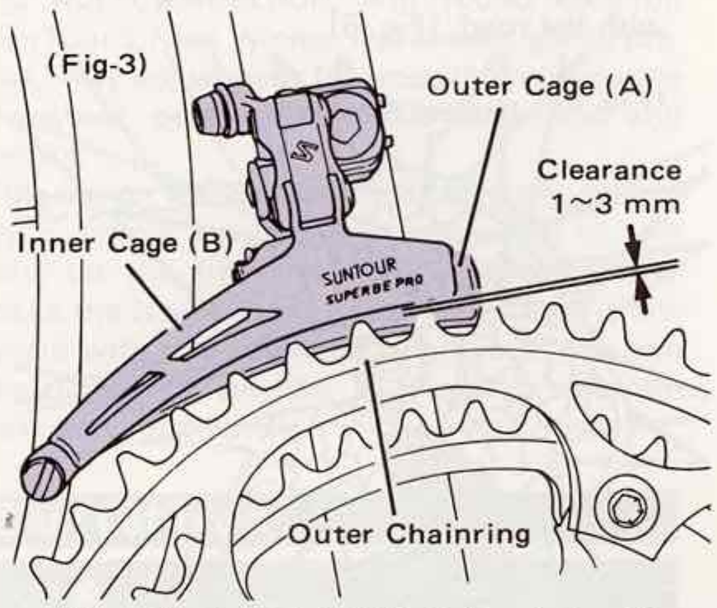

Moun Tech and AG-Tech front derailleurs have a 26-teeth gear range. Their cages are designed for a minimum of 6-teeth differential between chainrings. If the tooth differential between the chainrings is less than 6-teeth, the cage may hit the inner chainring. A 4 or 5-teeth gear differential can be accommodated by installing these derailleurs with a 5mm clearance between cage (A) and tooth. (Fig. 3)

EXAMPLE:

With double chainrings:
48T x 42T
are a 6 teeth differential.

With triple chainrings:
48T x 42T x 36T
are a 6 teeth differential.

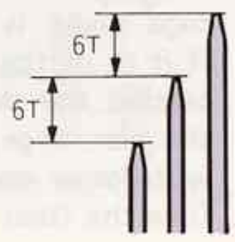

(2) Position the derailleur body so that outer cage plate (A) is parallel or outside the outer chainring. (Fig. 4)

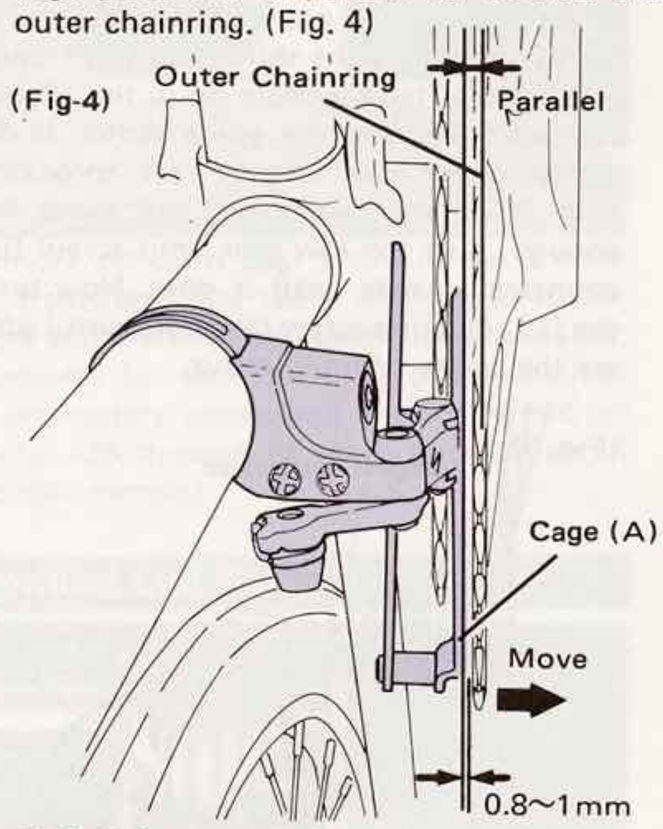

3) Shift Adjustment

(1) Inner cage

With the chain in the largest rear sprocket, turn the cranks in the driving direction. If chain rubs against the inner cage plate (B), tighten or loosen the low gear adjusting screw. (Fig. 5)

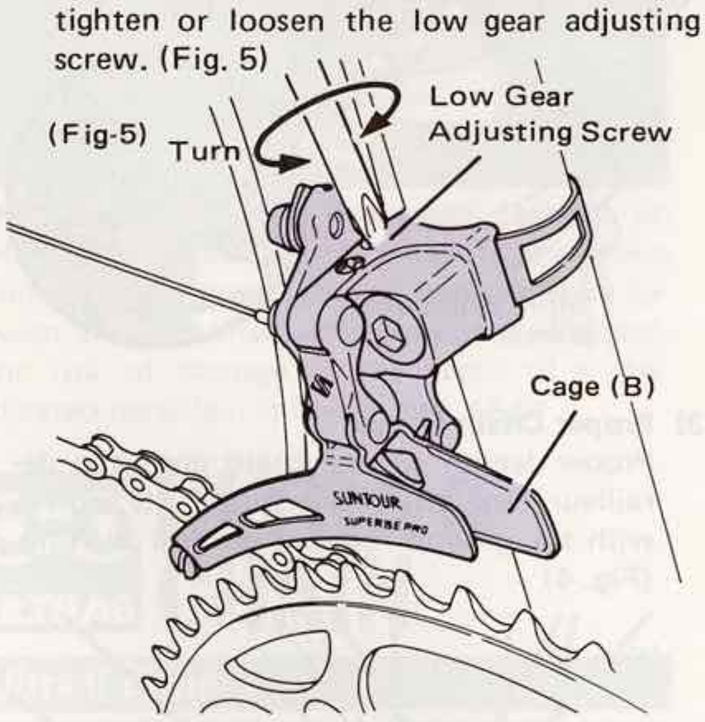

(2) Outer cage

With the chain in the outer chainwheel and the smallest rear sprocket, turn the cranks in the driving direction. If the chain rubs against the outer cage plate (A), tighten or loosen the hi gear adjusting screw. (Fig. 6)

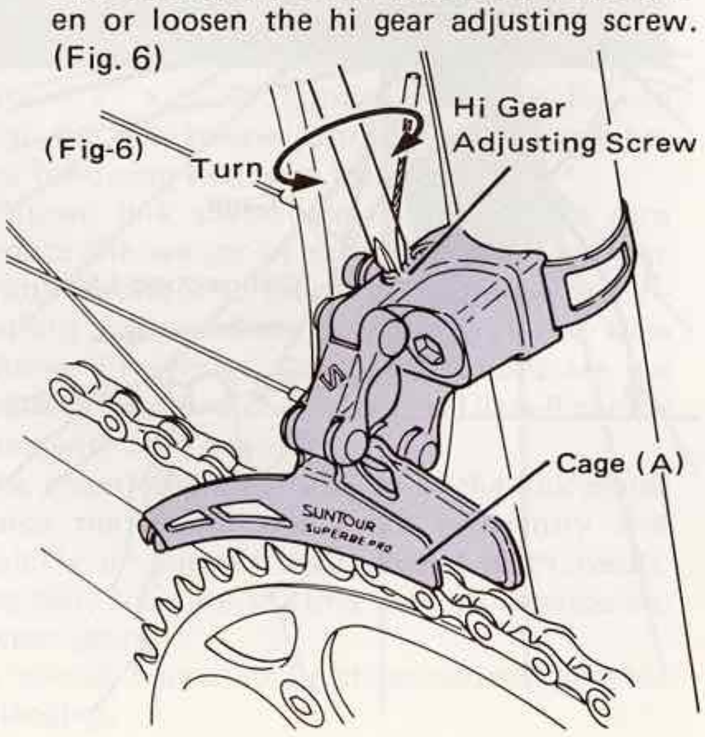

How To Install The Trimec Derailleur

(1) The following dimensional restrictions must be maintained for efficient performance of the Trimec derailleur system.

A: Direct Mounting
Thickness of rear dropout: 7 mm
Dimension "A": 36-38.5 mm

B: Mounting With Bracket
Thickness of bracket: 5mm
Dimension "A": 36-37.5 mm

For the most efficient performance of the derailleur, dimension "A" must be 36.5mm to 37.5 mm. A special multiple freewheel must be used with this derailleur system. (Fig. 1)

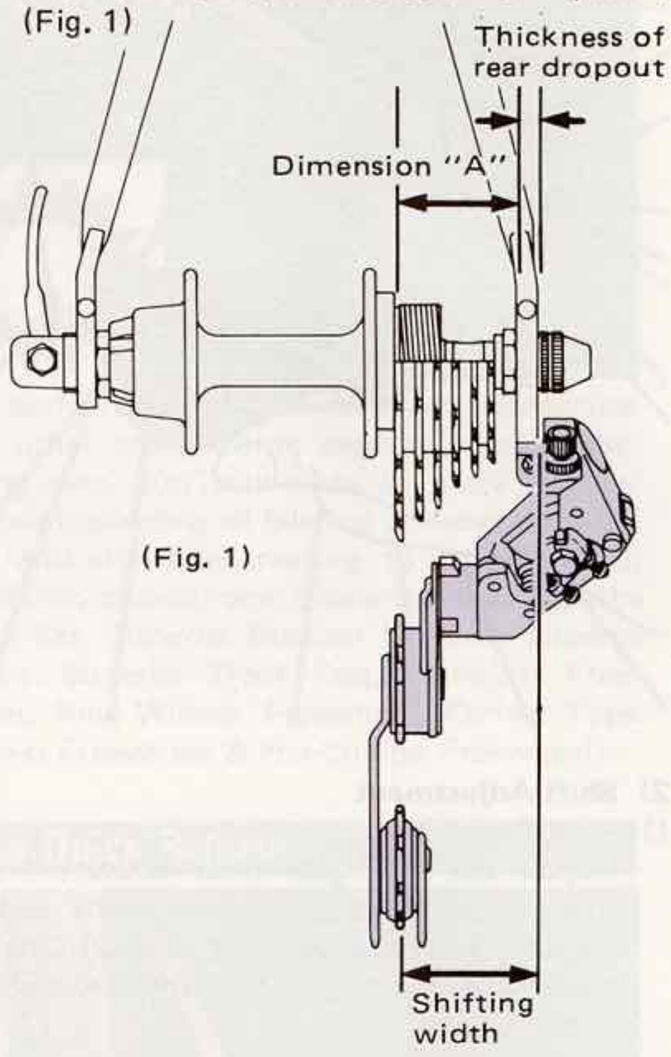

(Fig. 1)

(2) Adjust the angle adjusting bolt so that the body of the derailleur is at a 45 degree angle to the chainstay. (Fig. 2 & 3)

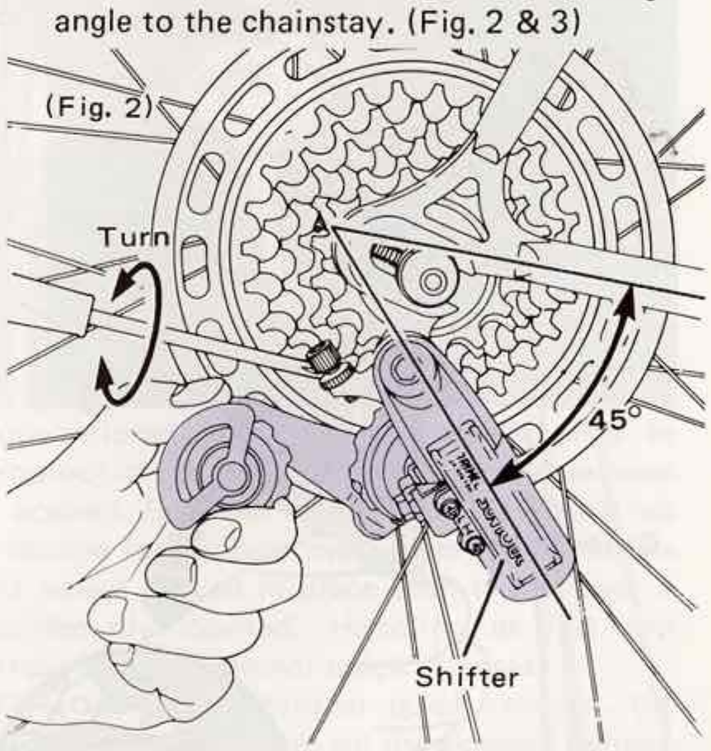

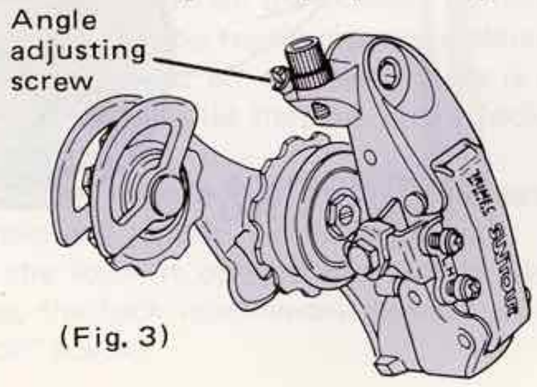

(Fig. 3)

(3) Put the cable through the lever handle and push the lever all the way forward. (Fig. 4) Unscrew the cable anchor bolt and insert the cable underneath the cable anchor clamp. Take the slack out of the cable and tighten the cable anchor bolt. (Fig. 5) Do not pull the cable too hard or leave it too loose before tightening the anchor bolt. A special cable consisting of 49 thin wires must be used for this derailleur to prevent cable stretch.

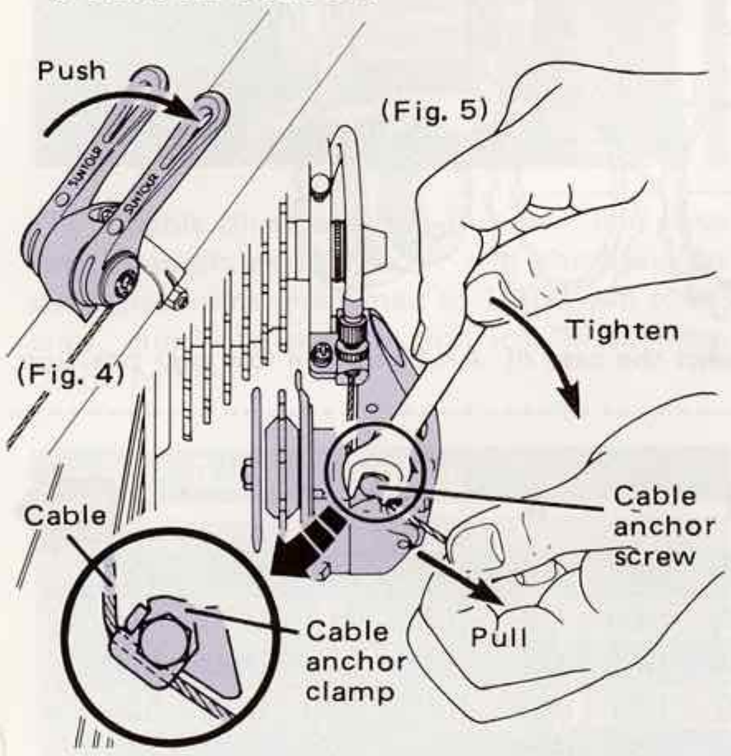

(4) Pull the right hand lever until you hear a "click". (Fig. 6) Then turn the crank forward. If the chain does not shift to the second sprocket, or if the chain chatters on the second sprocket, turn the cable adjusting bolt counter-clockwise one or two full turns. If the chain hits the third sprocket, turn the cable adjusting bolt clockwise one or two full turns. After adjusting the cable, make sure that the chain stays on the second sprocket without chattering. Adjust the cable so that the chain moves a little closer to the third sprocket. (Fig. 7)
The installation has been completed. Pull the control lever from one position to the other to see if the chain shifts smoothly. If the chain jumps off the smallest or largest sprocket, or if the chain chatters on these sprockets, re-adjust by turning the High- or Low-adjusting screws on the rear derailleur.

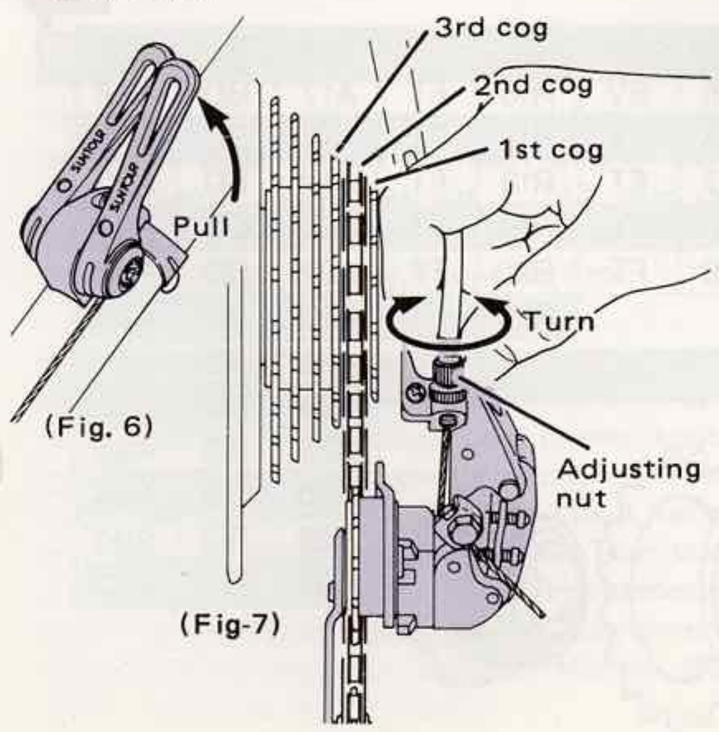

How To Install The Top-Mount Shift Levers

(1) Before installation, check the back of the left-hand lever. If it is marked with a letter "T", it's for top normal front derailleurs. No mark indicates low normal. If you have the wrong set, the synchro-shift mechanism will not function. (Fig. 1)

(Fig 1)

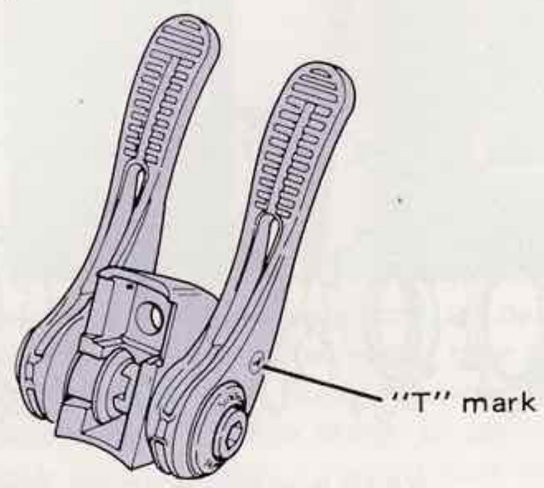

(2) Place the frame clamp around the down tube, install the clamp nut, and mount the shift levers into the clamp with your fingers. (Fig. 2)

(Fig. 2)

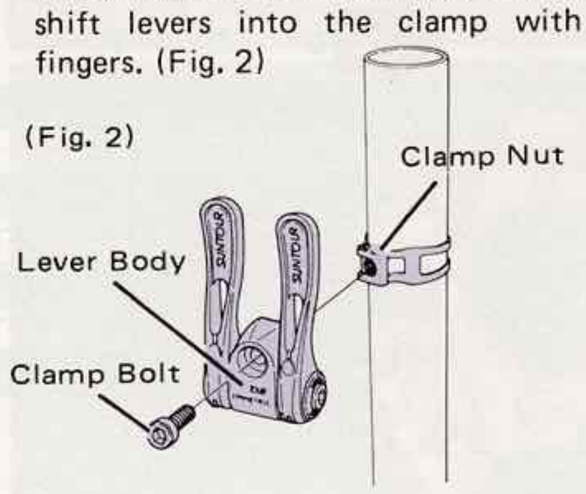

(Fig. 3) Brazed on Type

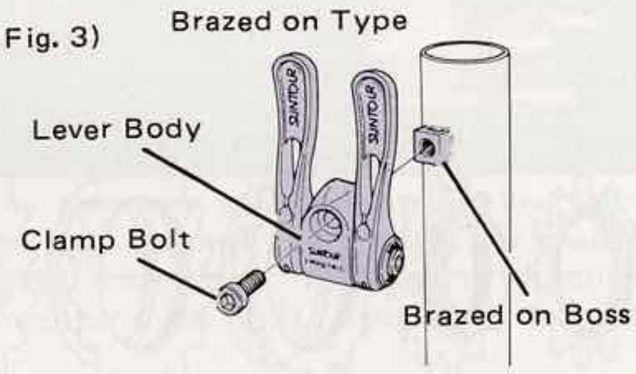

(3) Turn the clamp bolt clockwise with a 5 mm allen key. Before tightening, make sure that the shift levers are perfectly centered on the down tube. Then tighten the clamp bolt. (Fig. 4)

(Fig. 4)

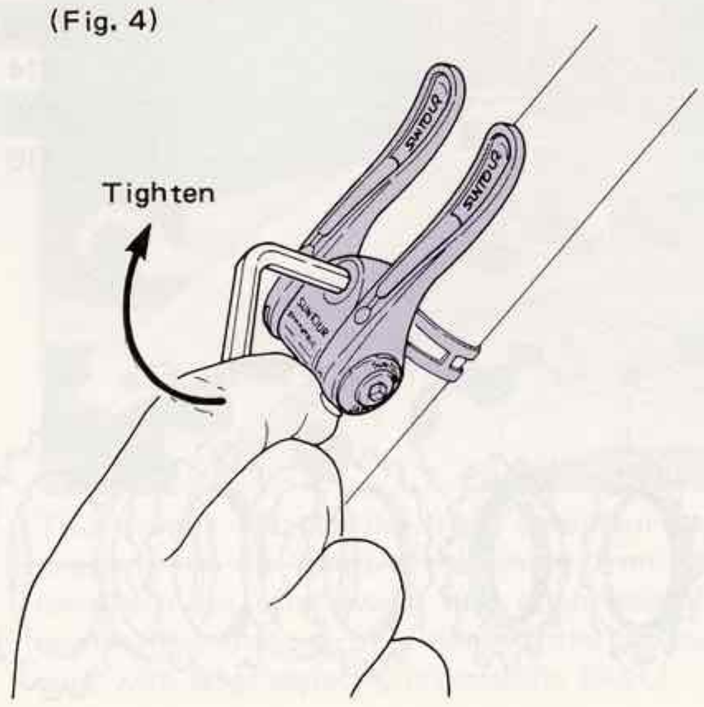

(4) Put the cable through the lever handle and hook the nipple of the cable into the lever slot. Take the slack out of the cable in the area "A" by pulling the other end of the cable. (Fig. 5)

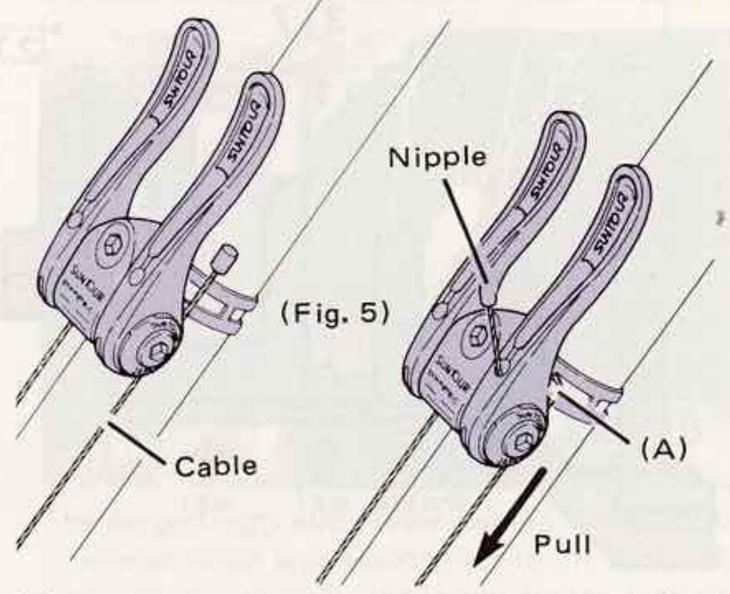

(5) To install the rear cable, push the right-hand lever all the way forward and then put the chain onto the smallest rear sprocket. Pulling the end of the cable with one hand, tighten the cable anchor screw to anchor the cable. (Fig. 6)
To install the front cable, pull the right-hand lever all the way backward and push the left-hand lever all the way forward. Then put the chain onto inner front chainring and largest rear sprocket, and anchor the front cable through the front derailleur. (Fig. 7)

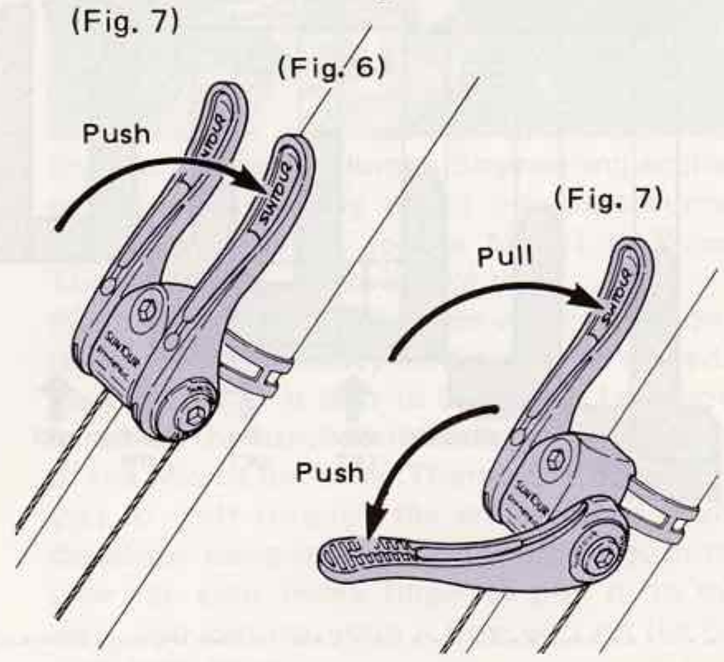

(6) For the top normal front derailleurs such as NSL, AG, Compe-V and Spirt models, cable anchoring must be done when the chain is on the outer front chainring and smallest rear sprocket. Watch for the slack of the cable when anchoring. (Fig. 8)

(Fig. 8)

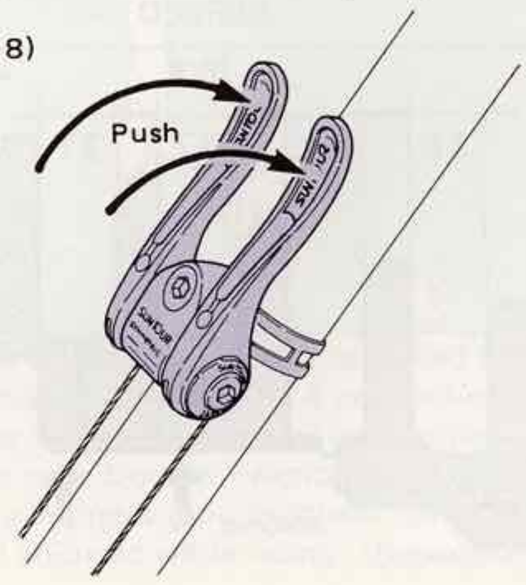

Constitution And Interchangeability Of Sprocket, Spacer

MICRO LITE FREEWHEEL 7-SPEED (ULTRA TYPE)

Model: LF-7000

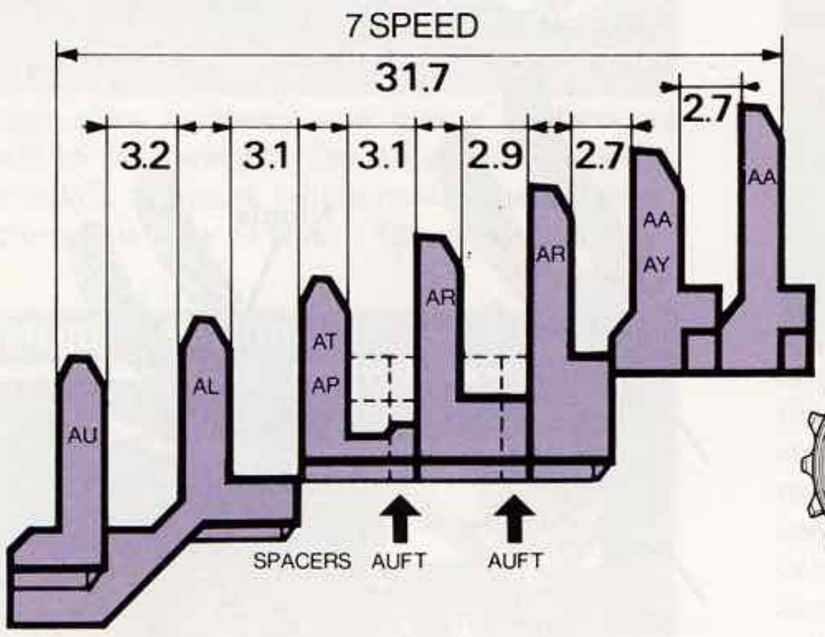

Top AU AL AP AT AR AR AY AA AA Low

1st	2nd	3rd	SP	4th	SP	5th	6th	7th
AU12	AL13	AP14	—	AR15	—	AR16	AY17	AA18
AU13	AL14	AT15	—	AR16	AUFT	AR17	AY18	AA19
		AT16	AUFT	AR17	AUFT	AR18	AA19	AA20
		AT17	AUFT	AR18	AUFT	AR19	AA20	AA21
							AA21	AA22
							AA22	AA23
							AA23	AA24

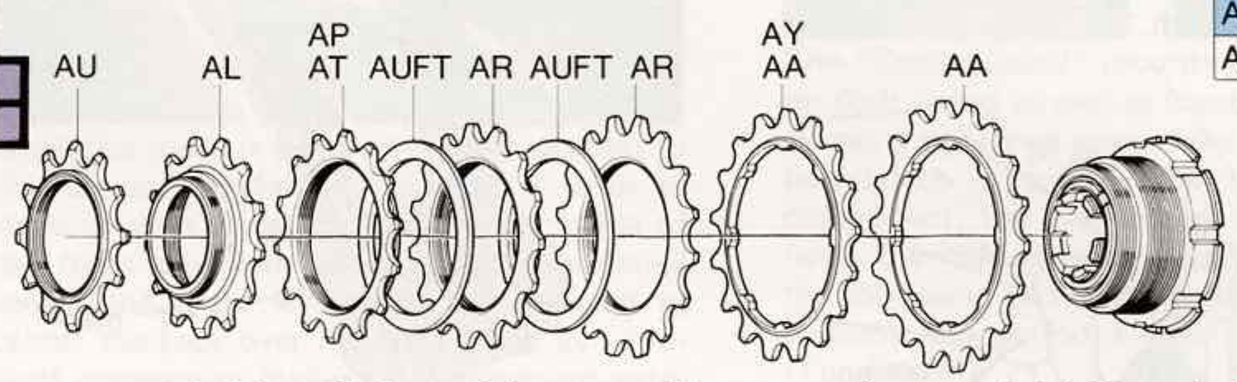

AA18 is available on 6th gear position except the case of AA19 on the low gear position.

NEW WINNER FREEWHEEL 7-SPEED (ULTRA TYPE)

Model: NW-7000

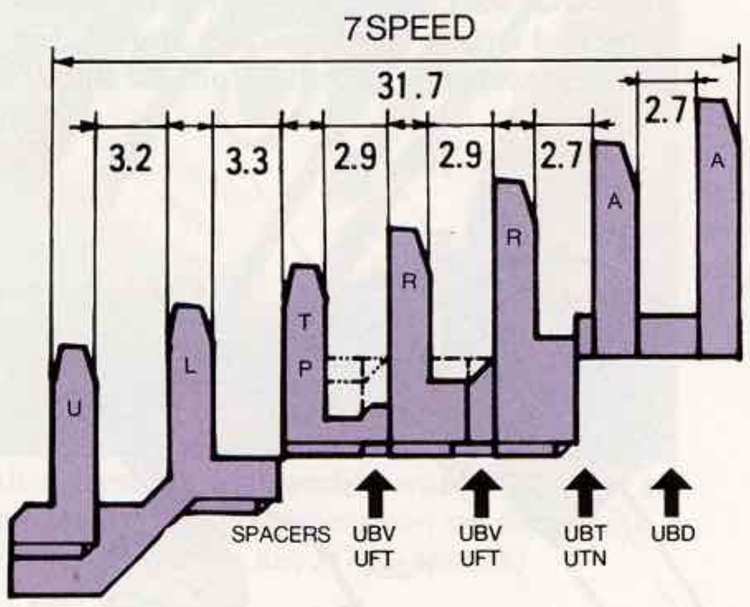

Top U L T R R A A Low

1st	2nd	3rd	SP	4th	SP	5th	SP	6th	SP	7th
U12	L13	P14	—	R15	UBV	R16	UBT	A17	UBD	A18
U13	L14	T15	UBV	R16	UFT	R17	UTN	A18	UBD	A19
U14	L15	T16	UFT	R17	UFT	R18	UTN	A19	UBD	A20
		T17	UFT	R18	UFT	R19	UTN	A20	UBD	A21
		T18	UFT	R19	UFT	R20	UTN	A21	UBD	A22
		T19	UFT	R20	UFT	R21	UTN	A22	UBD	A23
								A23	UBD	A24
								A24	UBD	A25
								A25	UBD	A26
								A26	UBD	A28
								A28	UBD	A30
								A30	UBD	A32

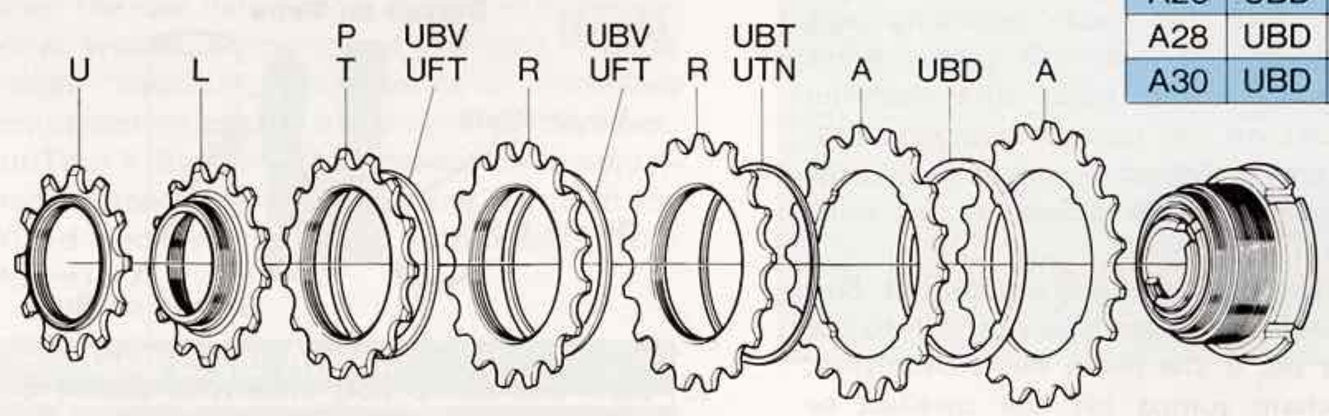

NEW WINNER FREEWHEEL 6-SPEED

Model: NW-6000

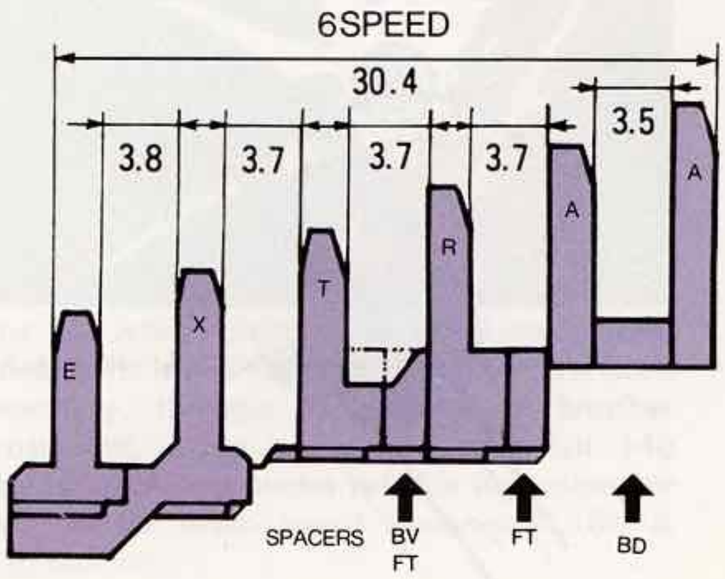

Top E X T R A A Low

1st	2nd	3rd	SP	4th	SP	5th	SP	6th
E13	X14	T15	BV	R16	FT	A17	BD	A18
E14	X15	T16	FT	R17	FT	A18	BD	A19
E15	X16	T17	FT	R18	FT	A19	BD	A20
		T18	FT	R19	FT	A20	BD	A21
		T19	FT	R20	FT	A21	BD	A22
				R21	FT	A22	BD	A23
						A23	BD	A24
						A24	BD	A25
						A25	BD	A26
						A26	BD	A28
						A28	BD	A30
						A30	BD	A32

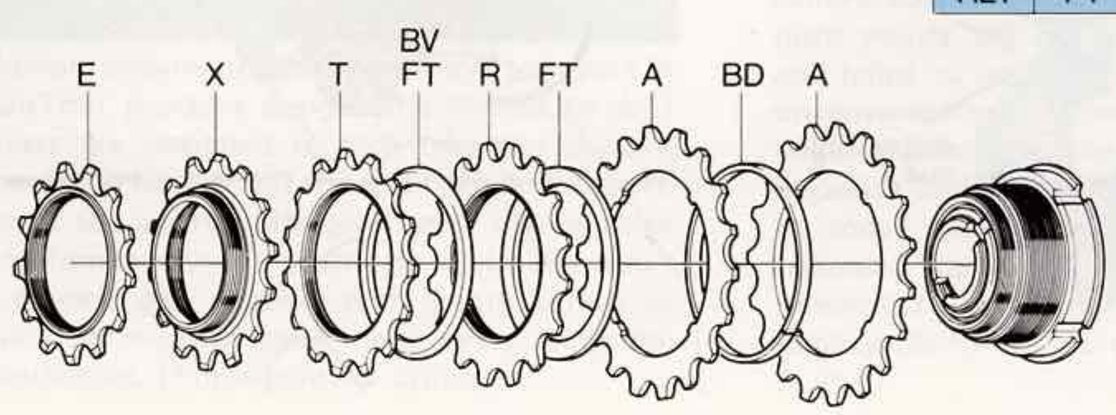

MICRO LITE FREEWHEEL 6-SPEED (ULTRA TYPE)

Model: LF-6000

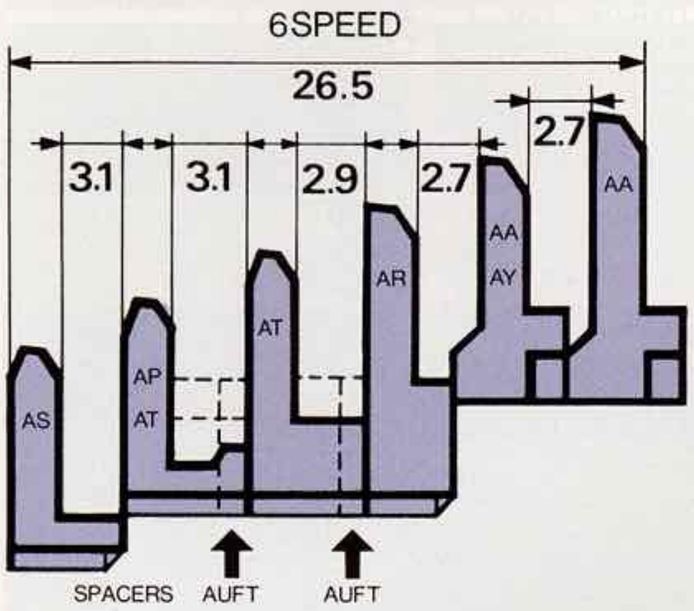

Top ← AS, AP AT, AT, AR, AY AA, AA → Low

1st	2nd	SP	3rd	SP	4th	5th	6th
AS13	AP14	—	AT15	—	AR16	AY17	AA18
AS14	AT15	—	AT16	AUFT	AR17	AY18	AA19
	AT16	AUFT	AT17	AUFT	AR18	AA19	AA20
					AR19	AA20	AA21
						AA21	AA22
						AA22	AA23
						AA23	AA24

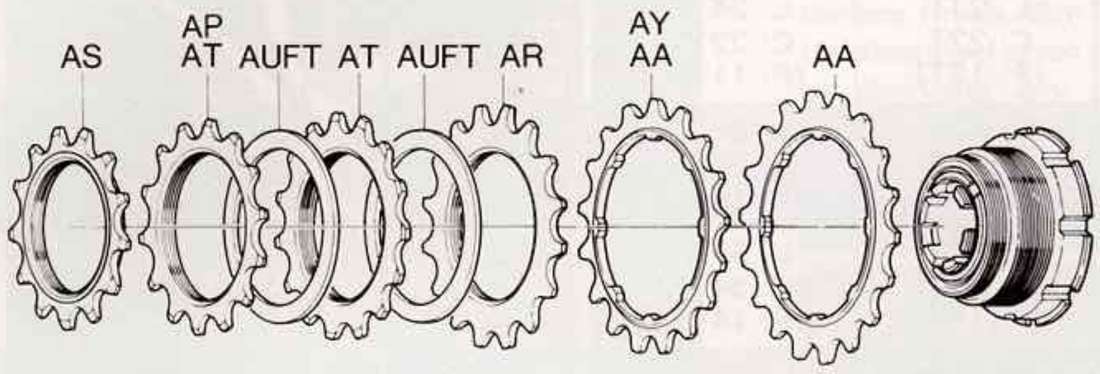

AA 18 is available on 5th gear position except the case of AA 19 on the low gear position.

NEW WINNER PREEWHEEL 6-SPEED (ULTRA TYPE)

Model: NW-6500

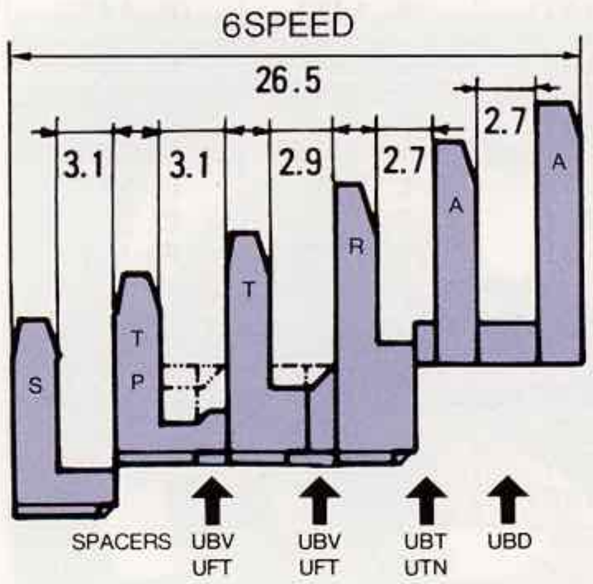

Top ← S, P T, T, R, A, A → Low

1st	2nd	SP	3rd	SP	4th	SP	5th	SP	6th
S13	P14	—	T15	UBV	R16	UBT	A17	UBD	A18
S14	T15	UBV	T16	UFT	R17	UTN	A18	UBD	A19
	T16	UFT	T17	UFT	R18	UTN	A19	UBD	A20
	T17	UFT	T18	UFT	R19	UTN	A20	UBD	A21
	T18	UFT	T19	UFT	R20	UTN	A21	UBD	A22
					R21	UTN	A22	UBD	A23
							A23	UBD	A24
							A24	UBD	A25
							A25	UBD	A26
							A26	UBD	A28
							A28	UBD	A30
							A30	UBD	A32

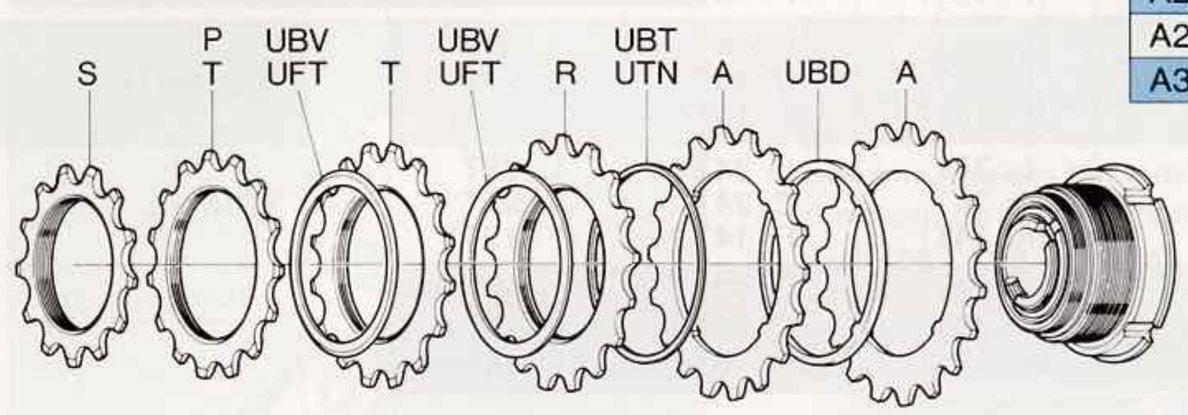

NEW WINNER FREEWHEEL 5-SPEED

Model: NW-5000

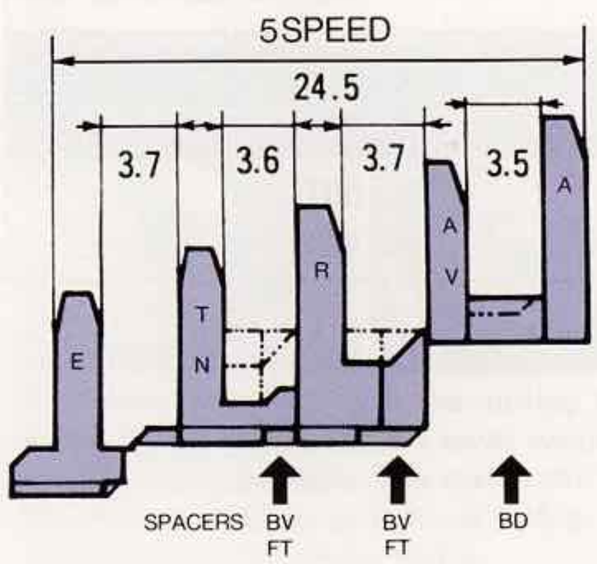

Top ← E, N T, R, V A, A → Low

1st	2nd	SP	3rd	SP	4th	SP	5th
E13	N14	—	R15	BV	V16	—	A17
E14	T15	BV	R16	FT	A17	BD	A18
E15	T16	FT	R17	FT	A18	BD	A19
	T17	FT	R18	FT	A19	BD	A20
	T18	FT	R19	FT	A20	BD	A21
	T19	FT	R20	FT	A21	BD	A22
			R21	FT	A22	BD	A23
					A23	BD	A24
					A24	BD	A25
					A25	BD	A26
					A26	BD	A28
					A28	BD	A30
					A30	BD	A32

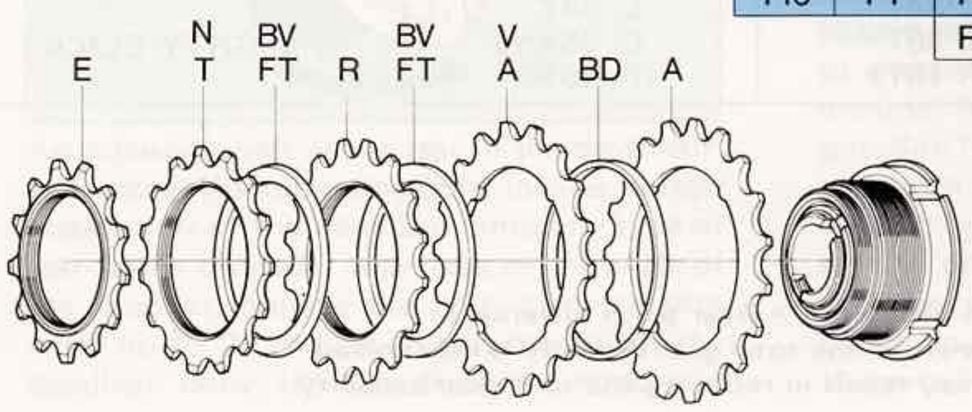

Gear Capacity Chart

Rear Derailleurs	Largest Rear Cogs & Gear Capacity		
	Dropout SPB (27mm)	Dropouts GT·GS·SDG·SDH (29mm)	Bracket GT (33mm)
	Regular (26 Bracket mm)	Bracket (29mm)	
SUPERBE PRO	L: 26T C: 25T (F: 12T)	L: 27T C: 25T (F: 11T)	L: 30T C: 25T (F: 8T)
SUPERBE	L: 23T C: 22T (F: 12T)	L: 24T C: 22T (F: 11T)	L: 28T C: 22T (F: 7T)
SUPERBE TECH-S	L: 26T C: 28T (F: 16T)	L: 28T C: 28T (F: 14T)	L: 30T C: 28T (F: 12T)
SUPERBE TECH-L	L: 34T C: 34T (F: 14T)	L: 34T C: 34T (F: 14T)	L: 34T C: 34T (F: 14T)
SUPERBE TECH-GTL	L: 34T C: 40T (F: 20T)	L: 34T C: 40T (F: 20T)	L: 34T C: 40T (F: 20T)
MOUN TECH	L: 34T C: 34T (F: 14T)	L: 34T C: 34T (F: 14T)	L: 34T C: 34T (F: 14T)
MOUN TECH-GTL	L: 34T C: 40T (F: 20T)	L: 34T C: 40T (F: 20T)	L: 34T C: 40T (F: 20T)
AG-TECH	L: 38T C: 34T (F: 10T)	L: 38T C: 34T (F: 10T)	L: 38T C: 34T (F: 10T)
AG-TECH-GTL	L: 38T C: 40T (F: 20T)	L: 38T C: 40T (F: 20T)	L: 38T C: 40T (F: 20T)
CYCLONE M-II	L: 26T C: 28T (F: 15T)	L: 26T C: 28T (F: 15T)	L: 30T C: 28T (F: 11T)
CYCLONE M-II-GT	L: 34T C: 34T (F: 13T)	L: 34T C: 34T (F: 13T)	L: 34T C: 34T (F: 13T)
BL	L: 24T C: 24T (F: 14T)	L: 24T C: 24T (F: 14T)	L: 26T C: 24T (F: 12T)
BL-S	L: 26T C: 30T (F: 18T)	L: 28T C: 30T (F: 16T)	L: 30T C: 30T (F: 14T)

Rear Derailleurs	Largest Rear Cogs & Gear Capacity		
	Dropout SPB (27mm)	Dropouts GT·GS·SDG·SDH (29mm)	Bracket GT (33mm)
	Regular (26 Bracket mm)	Bracket (29mm)	
BL-GT	L: 34T C: 34T (F: 14T)	L: 34T C: 34T (F: 14T)	L: 34T C: 34T (F: 14T)
ARX	L: 26T C: 28T (F: 15T)	L: 26T C: 28T (F: 15T)	L: 30T C: 28T (F: 11T)
ARX-GT	L: 32T C: 32T (F: 14T)	L: 34T C: 32T (F: 12T)	L: 34T C: 32T (F: 12T)
Vx	L: 26T C: 24T (F: 12T)	L: 28T C: 24T (F: 10T)	L: 30T C: 24T (F: 8T)
Vx-S	L: 26T C: 27T (F: 15T)	L: 28T C: 27T (F: 13T)	L: 30T C: 29T (F: 13T)
Vx-GT	L: 34T C: 34T (F: 14T)	L: 34T C: 36T (F: 16T)	L: 34T C: 36T (F: 16T)
AR	L: 26T C: 28T (F: 16T)	L: 28T C: 28T (F: 14T)	L: 30T C: 28T (F: 12T)
AR-GT	L: 34T C: 34T (F: 14T)	L: 34T C: 34T (F: 14T)	L: 34T C: 34T (F: 14T)
SEVEN	L: 26T C: 26T (F: 14T)	L: 26T C: 28T (F: 16T)	L: 30T C: 28T (F: 12T)
SEVEN-GT	L: 34T C: 32T (F: 12T)	L: 34T C: 32T (F: 12T)	L: 34T C: 32T (F: 12T)
VOLANTE	L: 24T C: 21T (F: 11T)	L: 26T C: 22T (F: 10T)	L: 28T C: 23T (F: 9T)
TRIMEC	L: 26T C: 28T (F: 16T)	L: 28T C: 28T (F: 14T)	—

Rear Derailleur	Largest Rear Cogs & Gear Capacity	
	Bracket Flat 34.5mm	Bracket Indented 34mm
HONOR	L: 30T C: 28T (F: 12T)	L: 30T C: 30T (F: 14T)
GT	L: 34T C: 36T (F: 16T)	L: 34T C: 36T (F: 16T)

Rear Derailleur	Largest Rear Cogs & Gear Capacity
	Bracket 26mm
CAP	L: 34T C: 20T
MIGHTY CLICK	L: 30T C: 16T

L = Largest rear sprocket
C = Total gear capacity (Front teeth difference + Rear teeth difference)
F = Maximum front teeth difference when the total gear capacity is maximized
Note: Excess of limited "F" range may result in reducing the total gear capacity.

Proper Length Of Spoke For Wheel Building

HUB / LIM / Spoke drilling & Number of cross	Road Type				Track Type			
	SUPERBE Model: RH-2000 Large flange		SUPERBE PRO Model: BH-1500 SUPERBE Model: RH-1000 Small flange		SUPERBE PRO Model: BH-1600 Model: BH-1700 SUPERBE Model:RH-3000 Large flange		SUPERBE Model: RH-4000 Small flange	
	Model (ADX-1)	Model (ADX-II)	Model ADX-I	Model ADX-II	Model ADX-I	Model ADX-II	Model ADX-I	Model ADX-II
20H (2X)	296	—	—	—	296	—	—	—
24H (2X)	290	288	296	293	290	288	296	293
28H (3X)	297	295	299	297	297	295	299	297
32H (3X)	295	293	298	296	295	293	298	296
36H (3X)	290	288	296	293	290	288	296	293
36H (4X)	300	298	303	301	300	298	303	301
20~36H(Radial)	273	271	284	282	273(272) ※	271(270) ※	284	282

(mm)

Courtesy: ARAYA Industry Ltd.

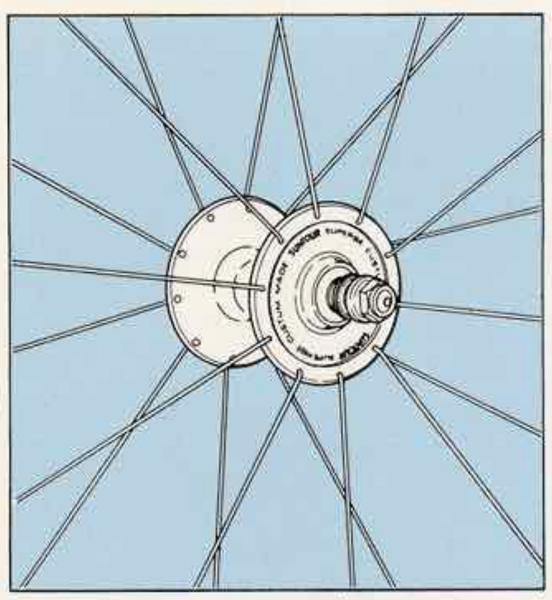

(20H · Radial)

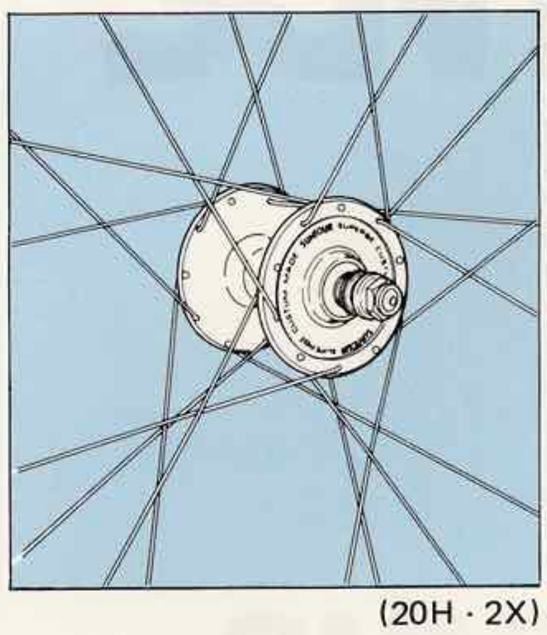

(20H · 2X)

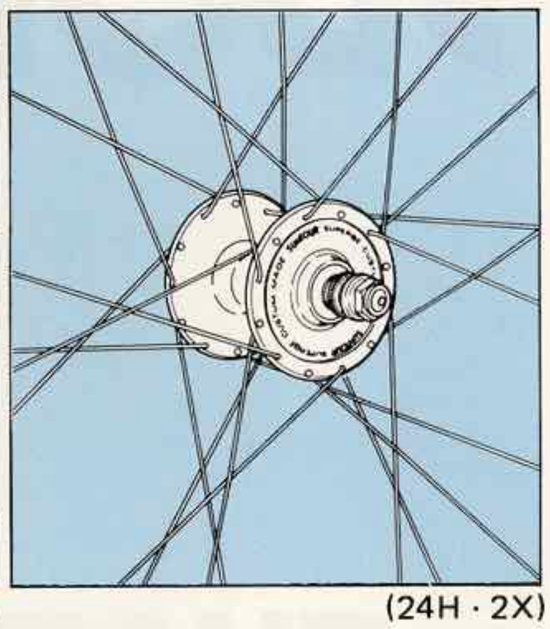

(24H · 2X)

The figures in ( ) are applicable to radial building with Superbe-Pro track hubs.

A spoke 1 mm longer than the length in the table is desirable for the left side of a track hub. This is not applicable to hubs which have the left flange inside the ball race, such as Superbe Pro and Sprint hubs.

A spoke 2 mm shorter is desirable for the right side of a rear road hub.

Spoke drilling P.C.D. and dimension between the flanges differs depending upon the manufacturer and model. The spoke length also differs slightly depending upon the manufacturer. Therefore, please note that the figures in the table may not be applicable to all cases.

Fork Ends Specifications

Rear Ends

Model	Type	A	B	C	D	E	F	G	H	Forged or pressed
SUPERBE	Track Racing	69°30′	5°	–	10	–	–	–	5	Pressed (Ground for precision)
	Track Racing	69°30′	5°	–	8	–	–	–	5	Pressed (Ground for precision)
SUPERBE PRO	Road Racing	70°	15°	27	10	M10x1	M3x0.5	–	7	Forged
GS III	Road Racing or Touring	67°	15°	29	10	M10x1	M3x0.5	M5x0.8	7	Forged
GS VI	Road Racing or Touring	67°	15°	29	10	M10x1	M3x0.5	M5x0.8	7	Forged
GT III	Road Racing or Touring	67°	15°	29	10	M10x1	–	M5x0.8x2	7	Forged
GT IV	Road Racing or Touring	67°	15°	29	10	M10x1	–	M5x0.8	7	Forged
SDG	Touring (Vertical Dropout)	69°	70°	29	10	M10x1	–	M5x0.8x2	7	Forged
SDH	Touring (Vertical Dropout)	69°	70°	29	10	M10x1	–	M5x0.8	7	Forged

Axle stopper screw & nut can be used on GT-III and GT-IV models.

Rear Ends

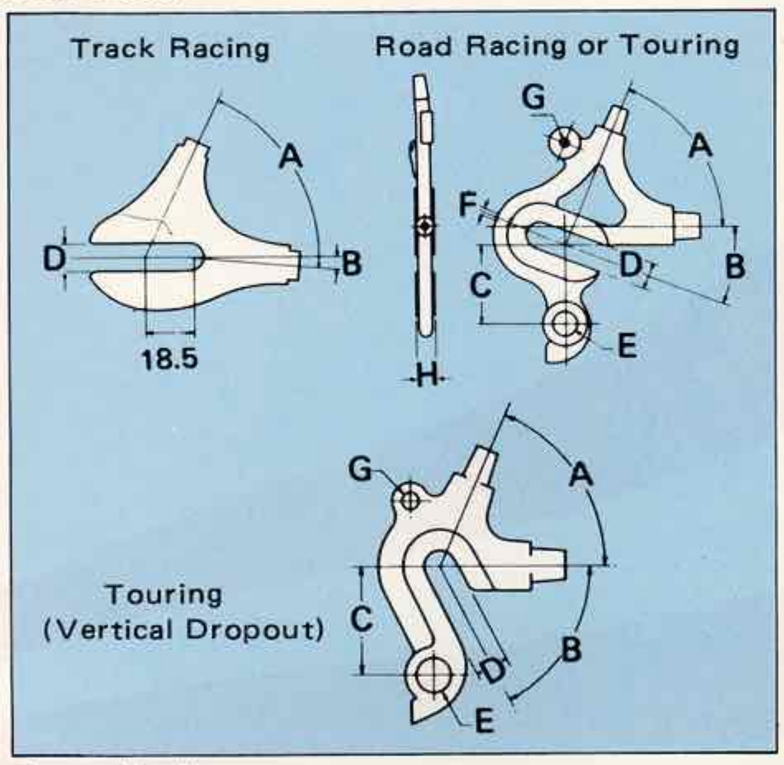

Front Ends

Model	Type	A	B	C	D	E	Forged or pressed
SUPERBE	Track Racing	130°	9	–	–	6	Forged
	Track Racing	130°	8	–	–	6	Forged
SUPERBE PRO	Road Racing	135°	9	–	–	6	Forged
GS	Road Racing or Touring	130°	9	M5x0.8	20	6	Forged
GT	Road Racing or Touring	130°	9	M5x0.8	20	6	Forged
SDB	Road Racing or Touring	130°	9	–	–	6	Forged

Front Ends

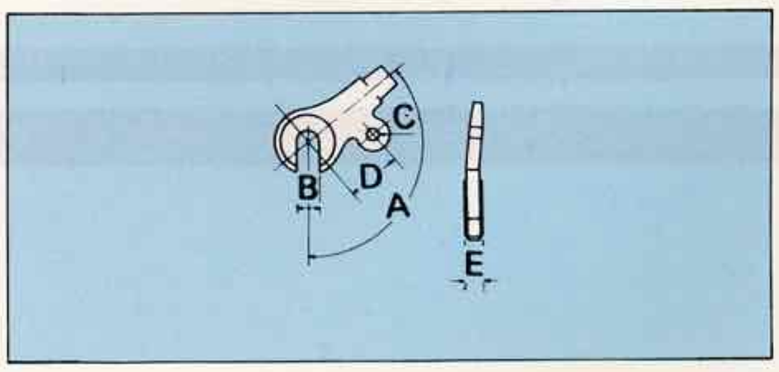

SUNTOUR

SunTour U.S.A., Inc.
10 Madison Road
Fairfield N.J. 07006 U.S.A.
Tel:(201)575-1128
Telex:136397
Facsm:(201)994-1136

MAEDA INDUSTRIES, LTD.
2-1 Minamikoyo-Cho
Sakai, Osaka, Japan
Tel:(0722)38-4561
Telex:5374-377
Facsm:(0722)27-9300

Bulk Rate
U.S. Postage
PAID
West Caldwell
N.J. 07006
Permit No. 198

Specifications are subject to change without notice. Printed in Japan SEP. '83